Make Beaded Panels On Your Router Table

WHAT YOU NEED TO KNOW ABOUT DADO BLADES

Woodsmith®

www.Woodsmith.com

Vol. 25 / No. 146

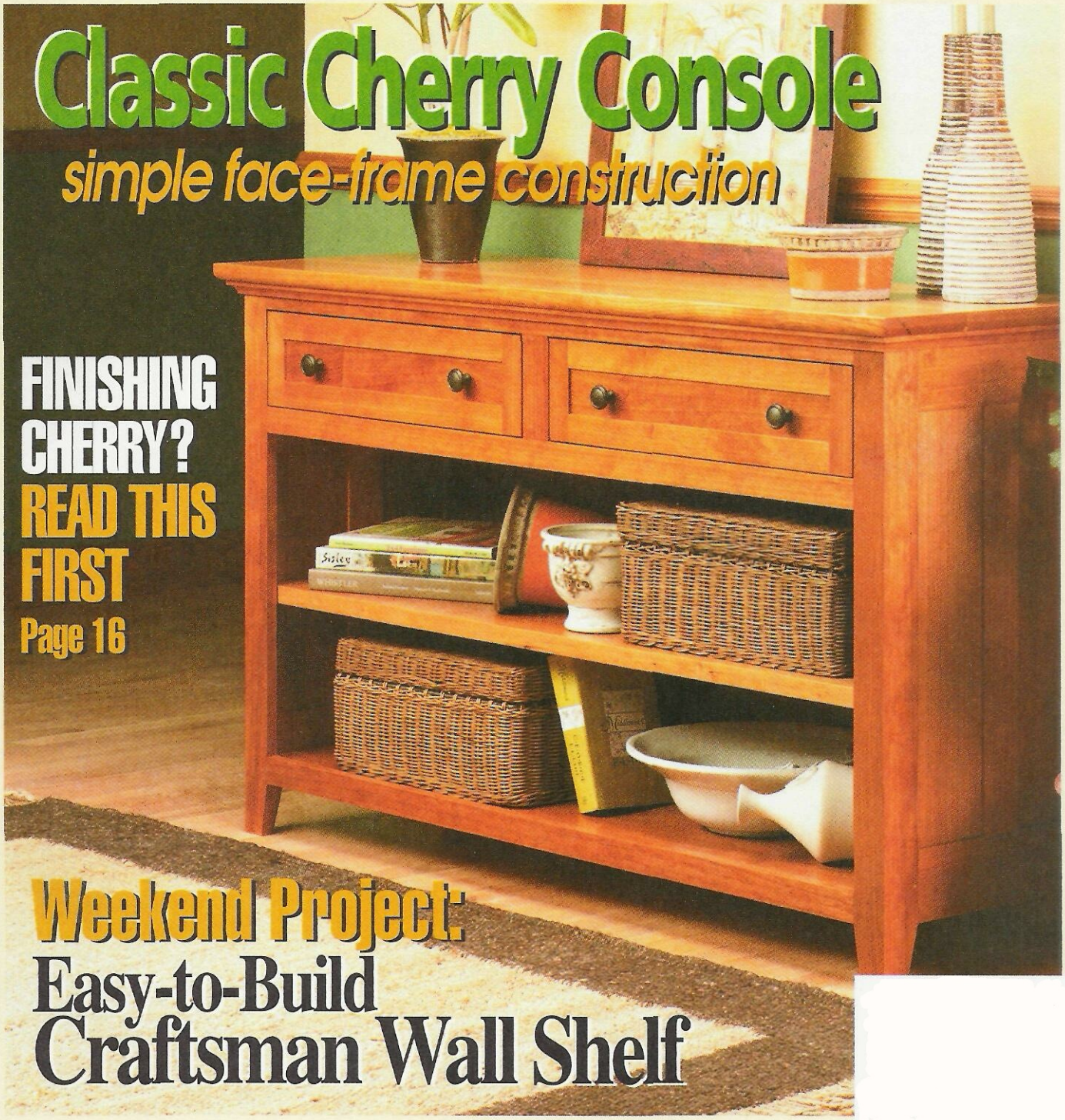

Classic Cherry Console

simple face-frame construction

FINISHING CHERRY? READ THIS FIRST

Page 16

Weekend Project: Easy-to-Build Craftsman Wall Shelf

A Publication of August Home Publishing

Woodsmith

No. 146 April, 2003

Publisher Donald B. Peschke
Editor Terry J. Strohman
Senior Editor Jon Garbison
Assistant Editors Ted Raife, Phil Huber
Art Director Todd Lambirth
Senior Illustrators David Kreyling, Dirk Ver Steeg, Harlan V. Clark
Graphic Intern Nathan Robertson

CREATIVE RESOURCES
Creative Director: Ted Kralicek • *Sr. Project Designers:* Ken Munkel, Kent Welsh, Ryan Mimick, Chris Fitch • *Shop Craftsmen:* Steve Curtis, Steve Johnson • *Sr. Photographer:* Crayola England

SPECIAL PUBLICATIONS
Corp. VP: Douglas L. Hicks • *Art Director:* Douglas A. Flint • *Senior Graphic Designer:* Chris Glowacki • *Senior Editor:* Craig Ruegsegger• *Asst. Editor:* Joel A. Hess • *Graphic Designers:* Vu Nguyen, Jonathan Eike • *Edit. Intern:* Cindy Thurmond

CIRCULATION
Subscriber Services Director: Sandy Baum • *New Business Circ. Mgr.:* Wayde Klingbeil • *Promotions Analyst:* Patrick Walsh • *Renewal Mgr.:* Paige Rogers • *Billing & Collections Manager:* Rebecca Cunningham • *Circ. Marketing Analysts:* Kris Schlemmer, Paula M. DeMatteis • *Sr. Graphic Designers:* Mark Hayes, Robin Friend

CORPORATE SERVICES
VP of Finance: Mary R. Scheve • *Controller:* Robin K. Hutchinson • *Sr. Account.:* Laura J. Thomas • *Accts. Payable:* Mary J. Schultz • *Accts. Receivable:* Margo Petrus • *Production Dir.:* George Chmielarz • *Electronic Pub. Dir.:* Douglas M. Lidster • *System Administrator:* Cris Schwanebeck • *PC Maint. Tech.:* Robert D. Cook• *Pre-press Image Specialists:* Troy A. Clark, Minniette Johnson • *New Media Mgr.:* Gordon C. Gaippe • *Web Site Art Dir.:* Gene Pedersen • *Web Server Admin.:* Carol Schoeppler • *Web Content Mgrs.:* David Briggs, Sue M. Moe • *Web Designer:* Kara Blessing • *Research Coordinator:* Nick Jaeger •*Pro. Development Dir.:* Michal Sigel • *H.R. Asst.:* Kirsten Koele • *Office Mgr.:* Natalie Lonsdale •*Facilities Mgr.:* Kurt Johnson • *Receptionist:* Jeanne Johnson • *Mail Room/Delivery:* Lou Webber

WOODSMITH MAIL ORDER
Operations Director: Bob Baker • *Cust. Service Mgr.:* Jennie Enos • *Warehouse Supr.:* Nancy Johnson • *Buyer:* Linda Jones • *Admin. Assist.:* Nancy Downey • *Sr. Cust. Serv. Reps.:* Tammy Truckenbrod, Anna Cox, April Revell, Deborah Rich • *Cust. Serv. Reps.:* Valerie Jo Riley, Kim Harlan • *Warehouse:* Sylvia Carey

WOODSMITH STORE
Mgr.: Dave Larson • *Merchandise Marketing Mgr.:* John Siberell •*Asst. Manager:* Tim Thelen • *Sales Staff:* Wendell Stone, Larry Morrison, Mark Johnson, Gregory Kauzlarich, Brian McCallum • *Office Mgr.:* Vicki Edwards

Woodsmith® (ISSN 0164-4114) is published bimonthly (Feb., Apr., June, Aug., Oct., Dec.) by August Home Publishing Company, 2200 Grand, Des Moines, IA 50312.
Woodsmith® is a registered trademark of August Home Publishing.

Copyright© 2003 August Home Publishing Company. All rights reserved.

Subscriptions: Single copy: $4.95. One year subscription (6 issues), $24.95. (Canada/International add $10 per year, U.S. funds.)
Periodicals Postage Paid at Des Moines, IA and at additional offices. USPS/Perry-Judd's Heartland Division Automatable Poly.
Postmaster: Send change of address to *Woodsmith*, Box 37112, Boone, IA 50037-2112.
Subscription Questions? Write to *Woodsmith*, P.O. Box 842, Des Moines, IA 50304-9961 or call 1-800-333-5075, 8:00 am to 5:00 pm, Central Time, weekdays. Or send an email to: orders@woodsmith.com
Email: woodsmith@woodsmith.com
World Wide Web: http://www.Woodsmith.com

Printed in U.S.A.

AUGUST HOME PUBLISHING COMPANY

EDITOR'S COLUMN

SAWDUST

A couple months back, I was talking to Chris Fitch (one of our project designers) about coming up with a design for a wall shelf. Nothing too complicated — I wanted to be able to build it over a weekend.

After a few days, Chris came to me with an idea. Not a new idea, as it turned out, but an old one.

While doing some research, he ran across an interesting shelf design from the early 1900s. One that had originally been featured in Gustav Stickley's magazine, *The Craftsman.* I liked what I saw: a couple of shelves connected with slats and attached to a wood back frame.

The shelf looked like the perfect project — until I looked closer. The problem was the back. Between two vertical stiles was a solid panel that appeared to be about 20" wide. This was one wide board.

Of course, we could have glued up a wide panel for the back. But there would have been the problem of wood movement to deal with. This would have made the joinery used to hold the panel in place pretty tricky. And even if we solved these problems, the shelf would be so heavy that hanging it would have been a real challenge.

It was starting to look like my simple, weekend project was shaping up to be a bit more than I wanted to tackle. But Chris wasn't ready to give up on the shelf. I'm glad he didn't.

What we ended up with is a slightly modified version of the Stickley original. Instead of a solid back, our version has a true frame with an upper and lower rail and an open space in between. This made the joinery straightforward — just simple mortises and tenons. And it allowed us to come up with a couple design options. For more on this project, check out the article beginning on page 18.

The wall shelf isn't the only "old" project we turned to in this issue. Several years back (in Issue No. 61), we built a cherry Shaker hall table. (It's still here in the building.)

The other day I ran across an old photo of the table. To be honest the table looks better now than when it was first built. And we haven't done a thing to it. (Except dust it.)

The color has mellowed and turned to a rich, reddish brown. But it's taken years to get to that point. Was it worth the wait? In this case, I think the answer is yes. But it got me thinking about when it's okay to stain cherry and when it's best left alone. To learn more about the guidelines we came up with, turn to the article on page 16.

Terry

Woodsmith Readers' Gallery

Visit other *Woodsmith* subscribers' workshops, and see photos of the projects they've built. It's all online in the new Readers' Gallery on the *Woodsmith* web site: **www.Woodsmith.com**

We want you to be part of the Readers' Gallery! To submit photos of your favorite *Woodsmith* projects or views of your shop, follow the instructions you'll find at the Reader's Gallery.

A LOOK INSIDE

CONTENTS

Features

Cherry Console 6

Straight, clean lines give this console a contemporary look. But don't let the simple appearance fool you. With its frame and panel assemblies, open shelves, and "framed" drawer fronts, there's plenty of woodworking that goes into this project.

When To Stain Cherry 16

Most woodworkers appreciate the rich, dark color of "aged" cherry. The question is — are you willing to wait for it to happen naturally or are you going to help it along a little?

Craftsman Wall Shelf 18

Quartersawn oak, and mortise and tenon joinery with a few classic details thrown in — this shelf is the perfect project for you to build in a weekend or two.

Dado Blades 22

Get an upclose look at dado blades and learn how this important table saw accessory can improve your woodworking. Plus, find out which type of dado blade is the best value for your money.

Shop-Made Beaded Panels 26

An ordinary bit and a router table are all it takes to make custom beaded boards for the storage bench. But don't stop there. This great detail can be used to dress up a lot of other projects too.

Beaded-Panel Storage Bench 28

Here's a project that throws the traditional mortise and tenon joint a few curves — but it won't throw you. The construction is straightforward, and we'll walk you through each detail of this unique bench step-by-step.

Departments

Tips & Techniques 4
Shop Notes 15
Sources 35

Cherry Console page 6

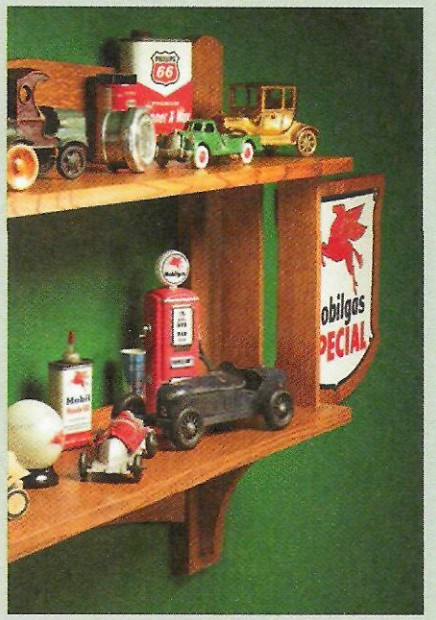

Craftsman Wall Shelf page 18

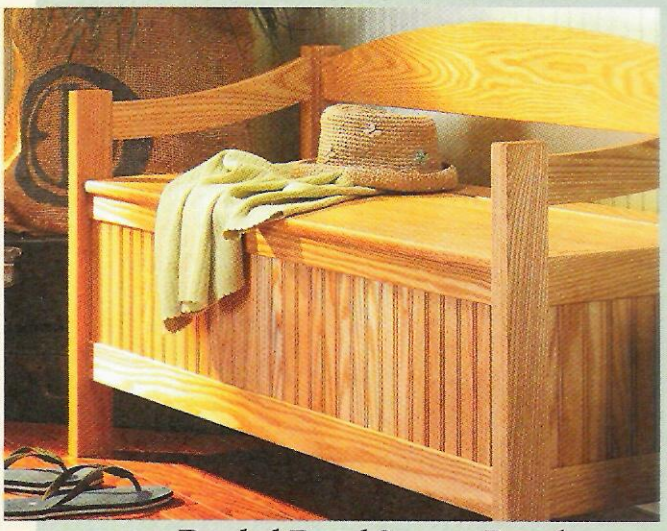

Beaded-Panel Storage Bench page 28

TIPS & TECHNIQUES

Mortise Jig For Router

During a recent project, I needed to cut a lot of mortises, so I built the plunge router mortising jig shown in the photo at right.

The jig is really just an auxiliary base plate made from an 8" x 8" piece of 1/4" Plexiglas. But the key to making this jig work is a pair of sliding door tracking wheels. (You can find them at most hardware stores.) The wheels I used have threaded centers for a mounting screw, see margin photo.

The jig centers the bit when the router is rotated until the wheels touch the edges of the workpiece. Plus, the wheels let the jig slide easily when cutting the mortise.

BASEPLATE. I used the plastic router base plate as a template for marking the mounting screw holes in the Plexiglas (Fig. 1). After drilling the holes, mount the router on the plate and insert a pointed bit, like a V-groove bit.

To find the center, lower the bit until it marks the plastic. Then remove the base from the router and scratch a line through the point across the plastic. Next, scribe two lines parallel to the center line and 1" away. Then drill a 3/4"-dia. hole for the bit, as you can see in Fig. 2.

Finally, drill holes for the mounting screws centered on the lines and the same distance from the center, as in Fig. 3. Then install the wheels and attach the jig to the router.

Bill Preston
Crete, Illinois

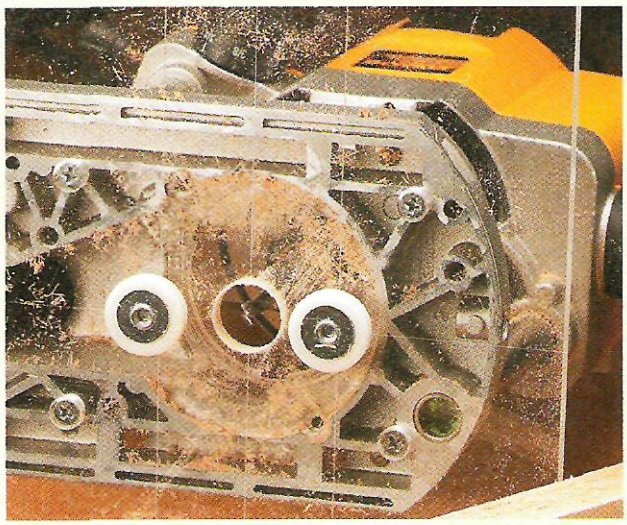

FREE
Online Tips

If you'd like even more woodworking tips, there's a simple solution. Just visit us at our web site and sign up to receive a free tip via email every week.

www.Woodsmith.com

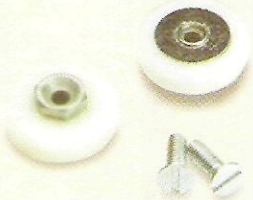

▲ *Sliding door tracking wheels allow the jig to roll smoothly along the workpiece.*

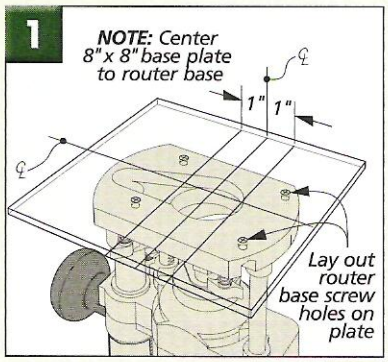

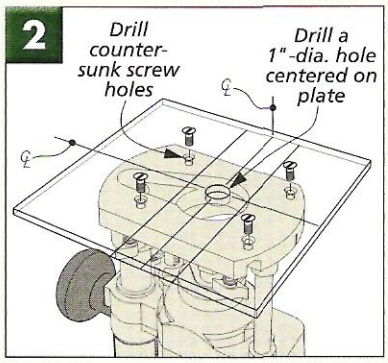

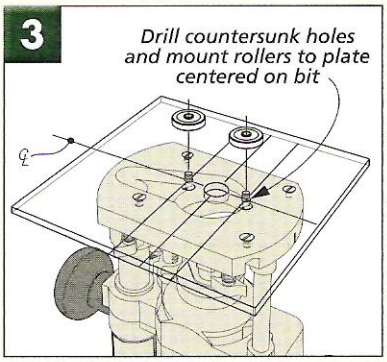

Can Opener Scribe

I reach for my marking gauge just about every day in my shop. But I've noticed that the marking point dulls quickly and tends to follow the grain. So I modified it by adding a cutting wheel to one end.

As you can see in the drawing, it's just an electric can opener cutting wheel that is screwed into one end of the gauge with a round-head screw. I put a washer on either side of the cutting wheel to support it and let it spin freely.

The wheel stays sharp for a long time and doesn't "wander" when marking with the grain.

John Frederick
Apache Junction, Arizona

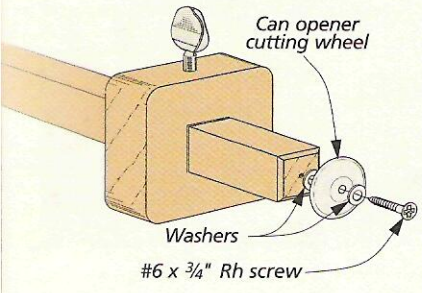

Silicone Brads

I've found a better way to attach glass stop. Instead of nailing it in place with wire brads and risk cracking the glass, I use some clear, silicone caulk.

After placing the glass in the frame, apply a thin bead of caulk to the frame. Then to hold the stop in place apply a few "dots" of caulk to the glass, as in the drawing. And as an added bonus, the glass never rattles.

Kevin Ruegsegger
Des Moines, Iowa

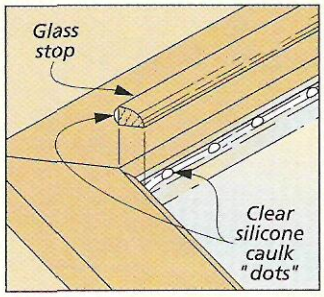

Shop Made Clamps

When crosscutting long workpieces on the table saw, I attach an auxiliary fence to the miter gauge for extra support.

To make it even more useful, I built the clamp that you can see in the photo to the right out of some scrap hardwood and basic hardware.

What's great about this simple clamp is that it works as a handy stop block without tying up any of my other clamps.

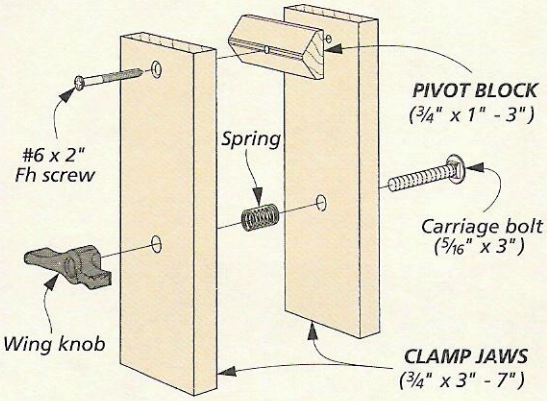

As you can see in the drawing, there's not much to making it. The jaws are made from 3/4"-thick hardwood. Between the jaws is a pivot block that is the same thickness as the auxiliary fence (mine is 3/4"). This way, it can clamp flat and tight to the fence. And it's beveled on one face so the jaw can pivot freely. The flat side of the block is glued to one jaw and the other jaw is connected by a wood screw. To prevent the screw from being pulled out as the clamp is tightened, I drilled an oversize hole in the jaw.

The clamp is tightened with a wing knob on a carriage bolt that runs through both jaws. And I added a spring on the bolt to make opening the clamp quick and easy.

Ralph Kocksmeier
Harrisonville, Missouri

▲ *This shop-built clamp makes a perfect stop block for auxiliary fences on your table saw or drill press.*

Inkjet Refill Glue Bottle

I use syringe-type ink cartridges to refill my computer's inkjet printer at home, as in the photo below. (They are available at office supply stores.) Squirting ink into the printer got me thinking that I could use the empty cartridges as a handy bottle for wood glue.

The small needle is perfect for laying down a thin, even bead of glue while assembling small parts. Or for gluing up thin stock, as you can see in the photo at right.

What's more, the needle makes this a great repair tool for injecting just the right amount of glue into hard-to-reach cracks and splits.

After filling up the printer with the ink, I cleaned out any remaining ink from the syringe with warm, soapy water and then refilled it with yellow glue.

Peter Krutsky
Kaleen, Australia

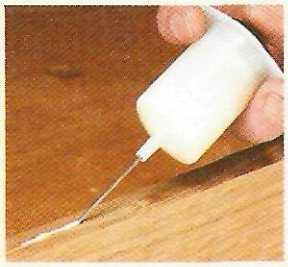

▲ *An inkjet refill syringe lays a thin bead of glue for thin stock or injecting glue into cracks.*

SUBMIT YOUR TIPS

If you have an original shop tip, we would like to hear from you and consider publishing your tip in one or more of our publications.

Just write down your tip and mail it to: *Woodsmith,* Tips and Techniques, 2200 Grand Avenue, Des Moines, Iowa 50312. Please include your full name, address, and daytime phone number in case we have any questions. If you would like, FAX it to us at 515-282-6741 or send us an email message at: woodsmith@woodsmith.com. We will pay you up to $200 if we decide to publish your tip.

QUICK TIPS

SHOP VAC DUST CONTROL

There's a simple way to improve the dust control in your shop. Simply add about an inch or two of water to the bottom of your wet/dry shop vacuum. The dust will stick to the water and not get blown back out into the workshop.

Add a half cup of bleach to keep the water clean. Change the water every week or so depending on use. For some reason, it also reduces the static charge build up so I don't get "zapped" by a shock after using the vacuum.

Ron Simpson
Bonner, Montana

TANNING WOOD

Like a lot of woodworkers, I often use poplar as a less-expensive substitute for other hardwoods in some of my woodworking projects. The trouble is that it usually has green streaks running through the grain that are hard to mask with stain.

An easy way to get the green out is to "tan" it by leaving it out in sunlight. In as little as one day, the wood darkens to a creamy brown. The longer you leave it out, the darker it gets.

Leonard Williams
Lancaster, Pennsylvania

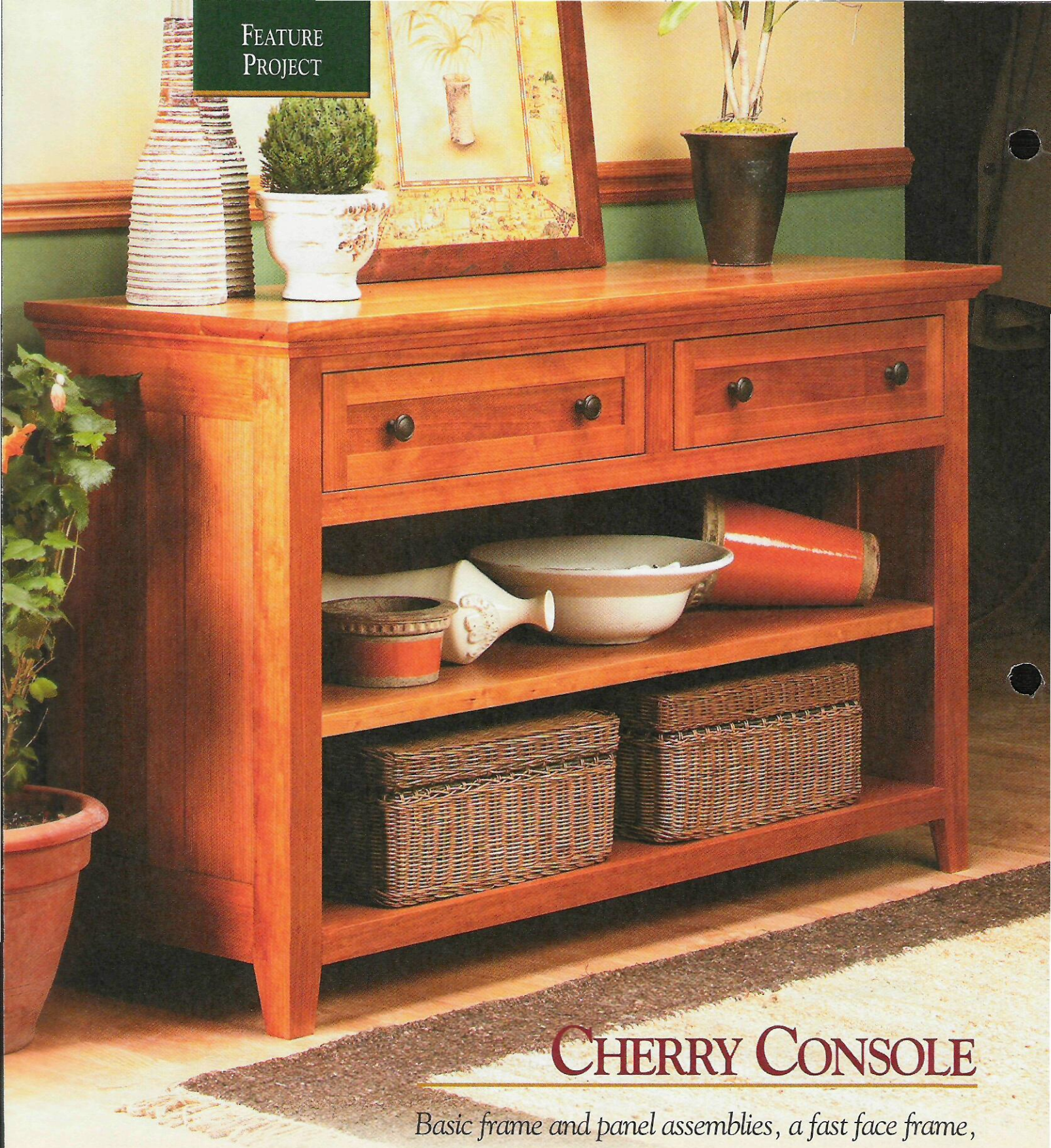

FEATURE PROJECT

CHERRY CONSOLE

Basic frame and panel assemblies, a fast face frame, and easy-to-build drawers — a perfect opportunity to try a variety of woodworking techniques.

Construction Details

OVERALL DIMENSIONS:
52"W x 32"H x 18"D

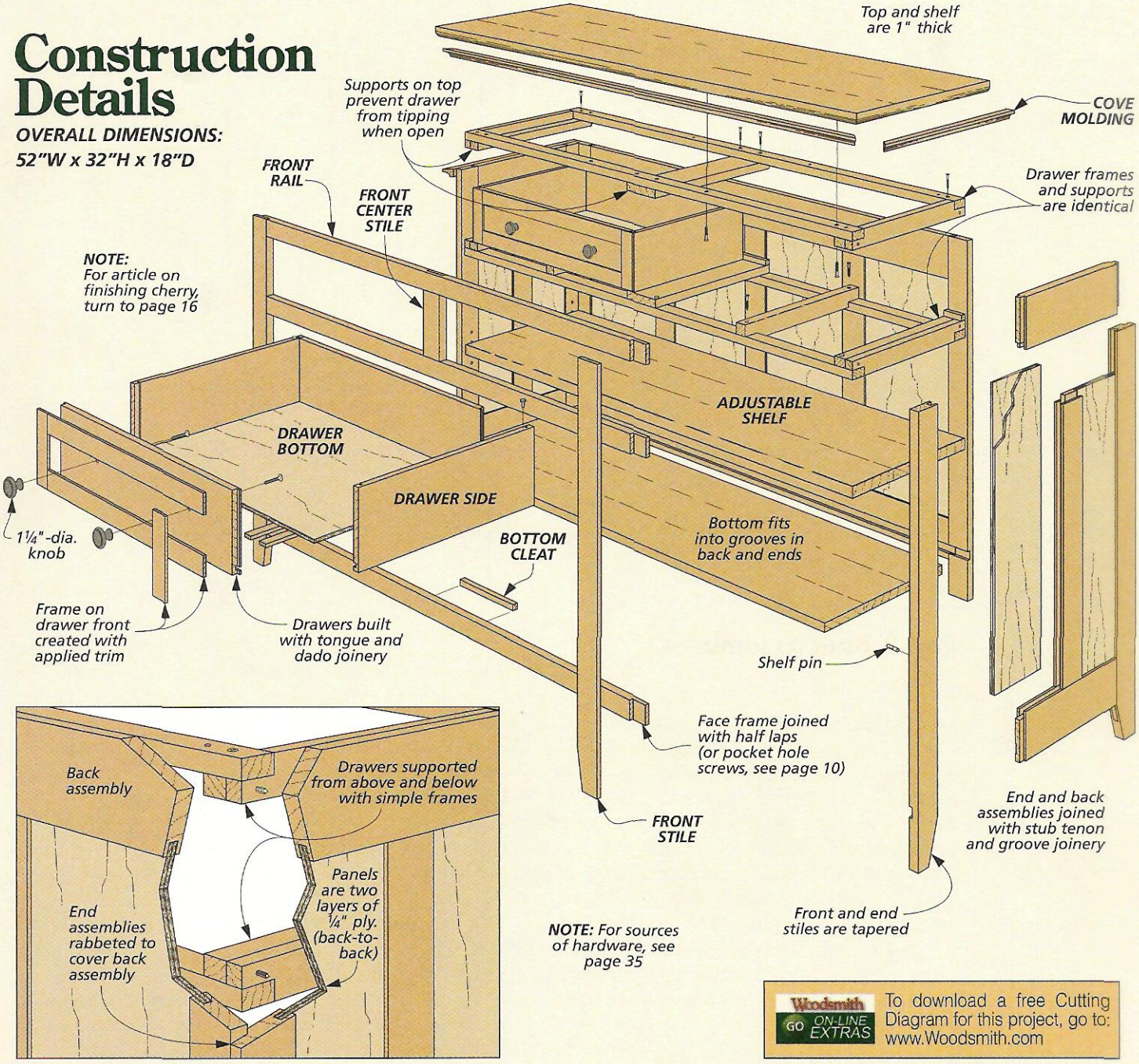

Woodsmith GO ON-LINE EXTRAS — To download a free Cutting Diagram for this project, go to: www.Woodsmith.com

MATERIALS & SUPPLIES

A End Panels (8)	¼ ply. - 5 9/16 x 21 11/16	
B Front End Stiles (2)	¾ x 2⅛ - 31	
C Back End Stiles (2)	¾ x 2½ - 31	
D Center End Stiles (2)	¾ x 2½ - 21¾	
E Upper End Rails (2)	¾ x 3¾ - 12¾	
F Lower End Rails (2)	¾ x 3½ - 12¾	
G Back Panels (8)	¼ ply. - 10 3/16 x 21 11/16	
H Back Stiles (2)	¾ x 2 - 31	
I Back Center Stiles (3)	¾ x 2½ - 21¾	
J Upper Back Rail (1)	¾ x 3¾ - 45½	
K Lower Back Rail (1)	¾ x 3½ - 45½	
L Front Stiles (2)	¾ x 2 - 31	
M Front Rails (3)	¾ x 1½ - 48	
N Front Center Stile (1)	¾ x 2 - 8⅜	
O Bottom (1)	¾ x 15 7/16 - 48½	
P Bottom Cleat (1)	½ x ½ - 6	
Q Frame Cleats (4)	¾ x 1½ - 15¼	
R Frame Stretchers (4)	¾ x 1½ - 48	
S Outer Dwr. Sprts. (4)	¾ x 1⅛ - 15¼	
T Inner Dwr. Sprts. (2)	¾ x 3½ - 15¼	
U Dwr. Fronts/Backs (4)	½ x 5¼ - 21⅛	
V Dwr. Sides (4)	½ x 5¼ - 15	
W Dwr. Bottoms (2)	¼ ply. - 14½ x 21⅛	
X Dwr. Trim	3/16 x 1½ - 100 rgh.	
Y Dwr. Guides (4)	¼ x ¾ - 14	
Z Dwr. Runners (2)	1 x 1½ - 15¼	
AA Dwr. Stops (4)	½ x 11/16 - 8 rgh.	
BB Adjustable Shelf (1)	1 x 15⅛ - 47⅞	
CC Top (1)	1 x 18 - 52	
DD Cove Molding	¾ x ¾ - 90 rgh.	

- (24) #8 x 1¼" Fh Woodscrews
- (8) #8 x 1½" Fh Woodscrews
- (3) #8 x 2" Fh Woodscrews
- (8) Plastic Stem Bumpers
- (4) #8 x 1½" Rh Woodscrews
- (4) #8 Washers
- (4) ¼" Spoon-style Shelf Supports
- (4) 1¼" x 1" "Ring" Knobs (Bronze)

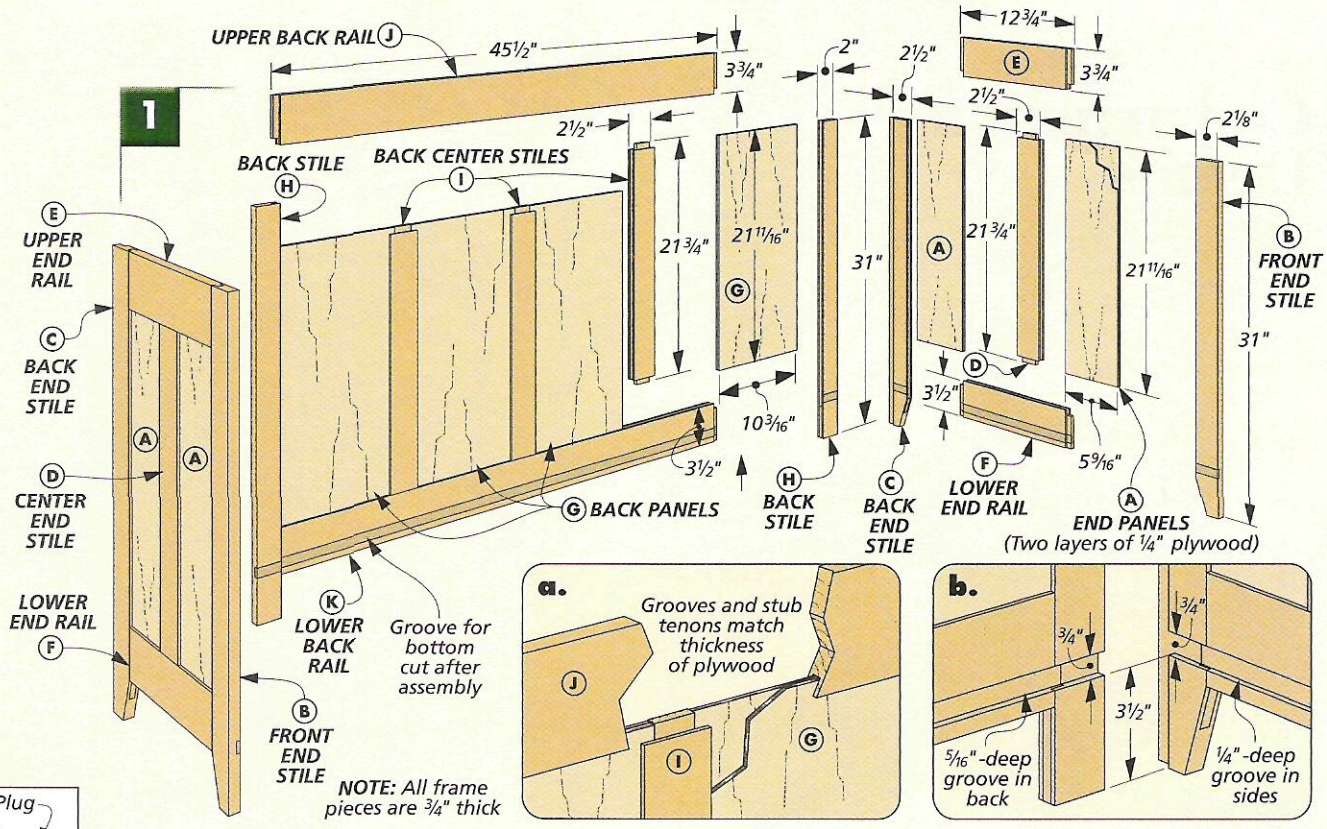

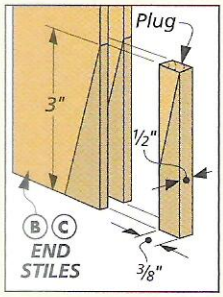

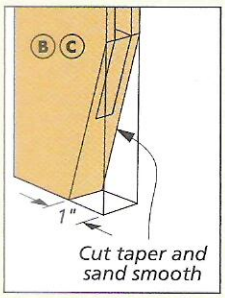

▲ *To hide the groove at the bottom of the end stiles, it's best to add a short plug before you cut the taper.*

End & Back Assemblies

Before getting started, it's always a good idea to familiarize yourself with how a project goes together. This console isn't complicated at all. It starts out with three frame and panel assemblies that join to form the ends and back of the case. Later, you'll add a face frame and a bottom panel, but there's nothing tricky about this.

As I mentioned, the back and end assemblies are built first. This is mostly just cutting stub tenons and grooves, but instead of cutting the frame pieces to size first, it's best to start with the panels.

PANELS. As you can see in Fig. 1, the *panels (A, G)* are ¼" plywood so they won't expand and contract (and so you won't have to edge glue a lot of panels). The problem is most ¼" plywood only has one good side, and with the open design, I wanted the panels to look good outside and in. So for each panel, I glued *two* pieces of ¼" plywood back-to-back. The box on the opposite page will walk you through how you can do this quickly and efficiently.

STILES & RAILS. The *stiles (B, C, H)*, *center stiles (D, I)*, and *upper (E, J)* and *lower rails (F, K)* are all cut to finished size from ¾"-thick stock, as you can see in Fig. 1.

The first thing to do is cut the grooves on all the pieces, as shown in Fig. 2. They're sized to hold the doubled-layered panels, so I used a ¼"-wide dado blade setup and centered the grooves by flipping the pieces end-for-end between passes. You'll want to sneak up on the position of the fence so the plywood just fits the grooves. And keep in mind that the grooves are cut on *both* edges of the center stiles. Note: For more on stub tenon and groove joinery, see the box in the left margin.

Next, the stub tenons can be cut on the ends of the rails and center stiles, as in Fig. 3. Like the grooves, it's quicker to use a dado blade (this time with an auxiliary fence). And again, you want to sneak up on the cut so the tenons fit the grooves.

Before these pieces can be assembled, there's a little work to do on the bottom of the end stiles.

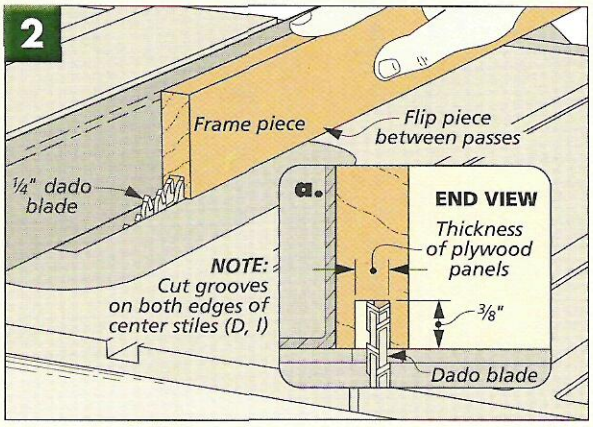

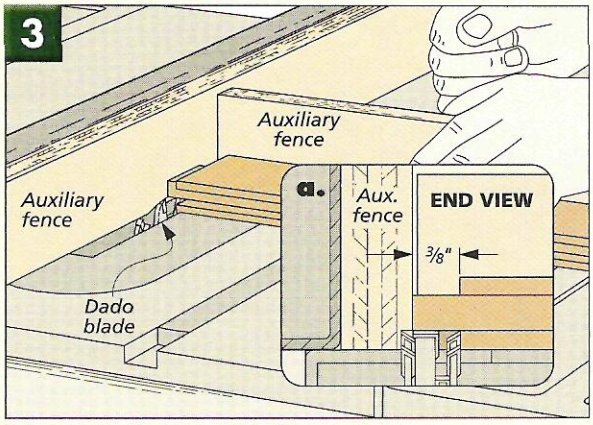

Woodsmith GO ON-LINE EXTRAS

If you want to learn more about stub tenon and groove joinery, check out our web site:

Woodsmith.com

First, I cut some plugs to glue into the grooves, as shown in the upper margin drawing on the opposite page. Then the end of the stile can be tapered, as in the lower margin drawing. (I did this with a band saw, but you can also use a hand saw.)

Once the tapers have been cut and sanded smooth, the ends can be assembled. This is pretty straightforward. Just make sure the frame stays flat and the pieces are flush across the top. When both ends are assembled, you can go ahead and put the back together.

There are still a couple of steps to complete before you can move on to the face frame in front. As you can see in Fig. 4, the first thing I did was cut a simple rabbet on the *back* stile of the end assemblies. This 1/4"-deep rabbet is sized to wrap around and cover the edge of the back assembly, as shown in Fig. 4a.

At this point, the next thing to do is to cut a groove near the bottom of each assembly. These will hold the bottom panel later, so it's important they all line up (Fig. 1b). But note that the grooves aren't the same depth. The ones on the ends are 1/4" deep, but the groove on the back is a little deeper (5/16") so the bottom panel can expand into the groove.

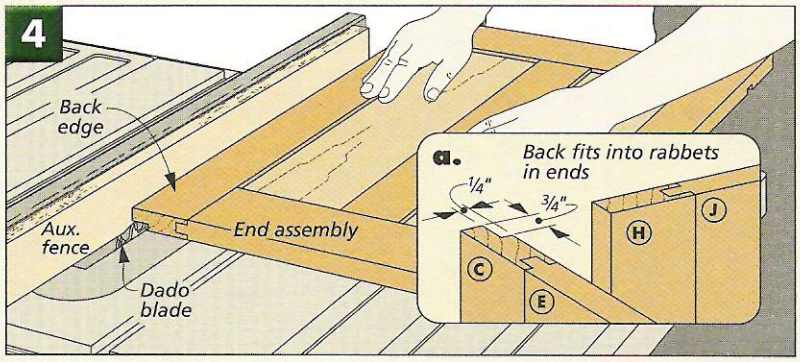

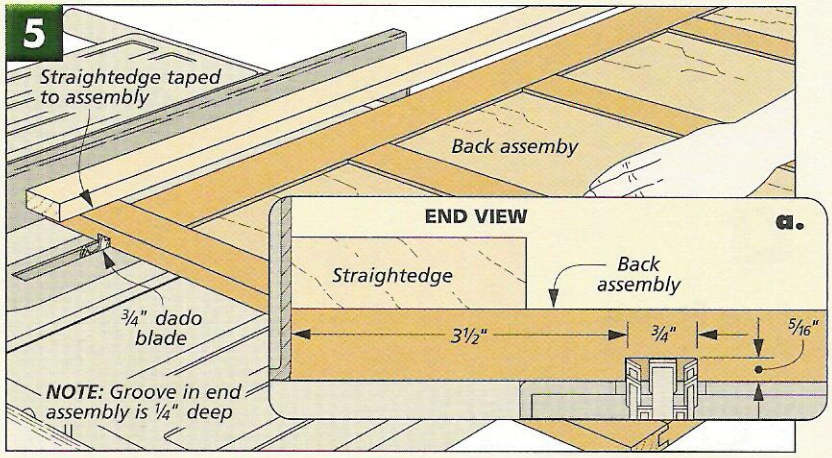

I figured the table saw is the best way to keep the grooves aligned, but with the "feet" on the bottom of the assemblies, you can't run the bottom edge against the rip fence.

Fortunately, there's an easy way to get around this. Simply attach a scrap straightedge to the bottom of each assembly, using carpet tape to hold it in place, as you can see in Fig. 5. The thing you'll want to concentrate on is keeping pressure down on the assembly so the groove is a consistent depth.

QUICK PANEL GLUE-UPS

This console requires a lot of 1/4" plywood panels that are glued up back-to-back. Rather than glue each pair separately, I glued up each set of panels at the same time, as you can see in the left drawing below. And to help distribute the clamping pressure evenly, I sandwiched the panels between pieces of 3/4" MDF.

When gluing the pairs together, you'll want to avoid using too much glue. (You don't want a lot of squeezeout.) And try to keep the edges of the panels lined up as much as possible. It'll make it easier when you trim them to final size, as in the right drawing. (I trimmed each panel separately.)

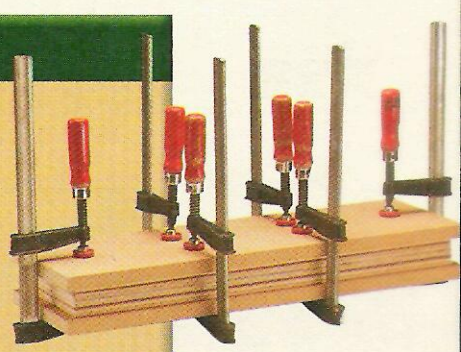

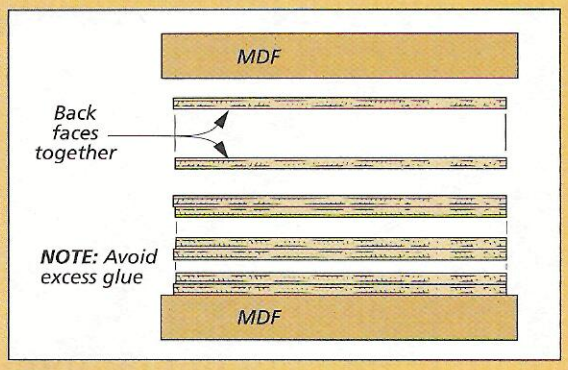

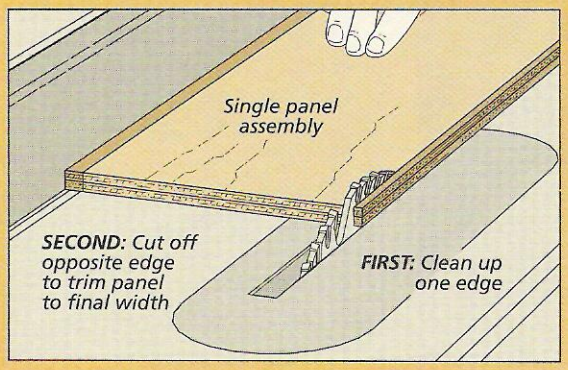

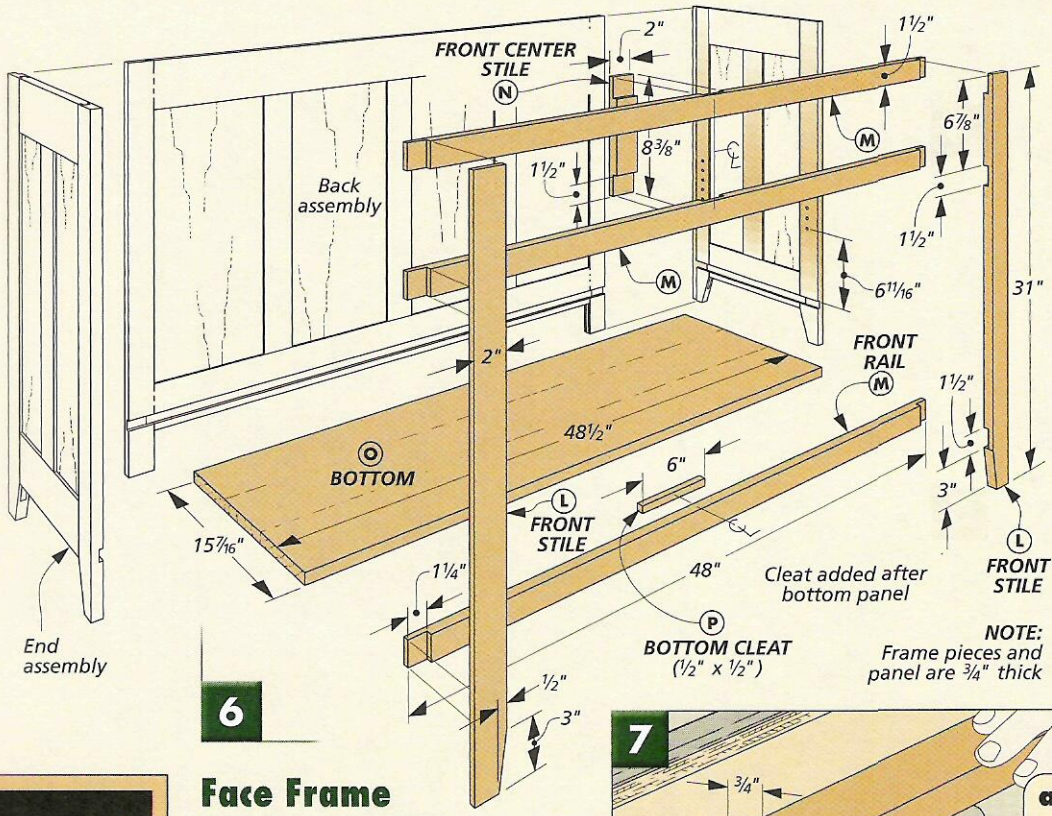

6

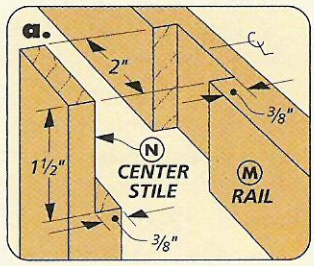

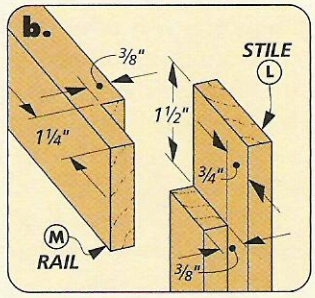

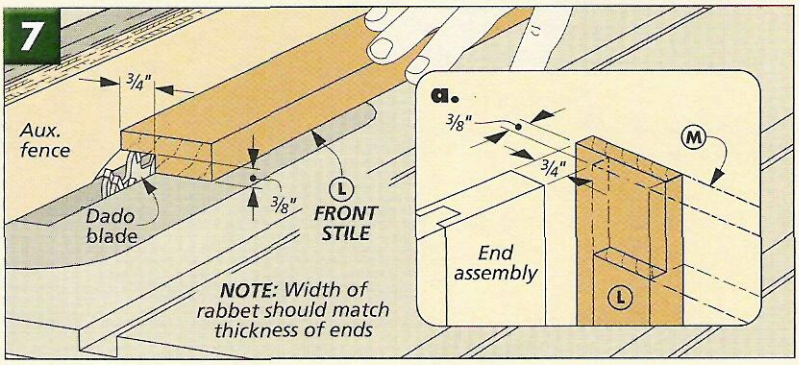

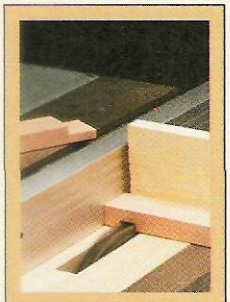

Want to know more about cutting half laps? Then take a look at the article on our web site:

Woodsmith.com

Woodsmith GO ON-LINE EXTRAS

Face Frame

With the end and back assemblies complete, the next section to build is the front face frame. As you can see in Fig. 6 above, this frame creates the openings for the two drawers and the adjustable shelf.

You've probably noticed by now that the face frame is joined with half laps. Unlike a mortise and tenon joint, both pieces are cut with basically the same setup, and you will be able to find a step-by-step article for this on our web site, see the margin note at left. But there is an even quicker way to build this frame — with pocket hole screws, as described in the box below. Just keep in mind that this will change some of the dimensions.

STILES. To make the face frame, I started by cutting just the *front stiles (L)* to size, as indicated in Fig. 6. Then on the outside edge I cut a rabbet that will wrap around the end panels, as shown in Figs. 7 and 7a.

RAILS. Now you're ready to cut the *front rails (M)* to finished size. Usually with half-lap joints, the rails would extend the full length of the case. But instead of reaching to the outside edges of the stiles, these rails stop at the rabbets, as you can see in Fig. 7a. So the rails end up

FAST FACE FRAMES WITH POCKET HOLE JOINERY

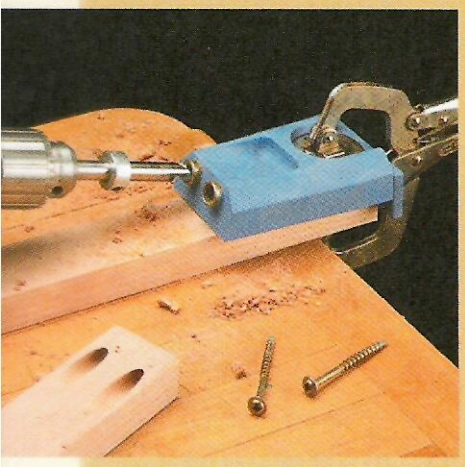

Pocket screw joinery is quick — it's designed specifically for building face frames (like the one for this project). And the procedure could not be any simpler. The frame pieces are cut to length so they butt together. Then you drill some angled holes, as in the photo at left. Finally, the pieces are clamped together and secured with screws, as shown in the drawing.

To build this face frame with pocket screws, you're going to need a drilling jig, some self-tapping screws, and a special stepped drill bit. (A face clamp is also handy for holding the faces of the pieces flush.) For some mail order sources, turn to page 35.

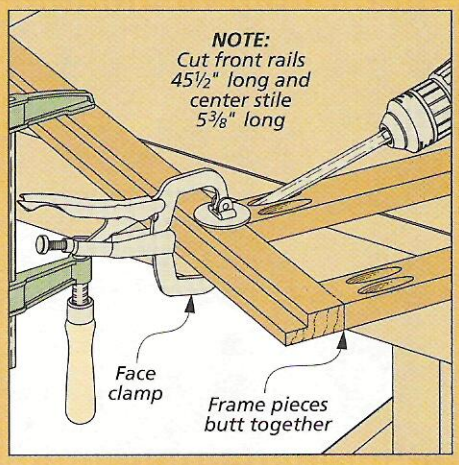

1½" shorter than the length of the case. (My front rails were 48" long.)

The other piece to cut at this point is the *center stile (N)*. Then you can begin the process of cutting the half laps that join the face frame, as in Figs. 6a and 6b. Just keep in mind that the half laps on the ends of the two upper front rails are cut on the *opposite* face as the one in the center. (I learned this the hard way.)

BOTTOM. After the half laps are cut and the front face frame is glued up, there are still a couple things to do before the case can be assembled. First, I glued up a ¾"-thick *bottom (O)*, as in Fig. 6. The panel is designed to be glued to the front rail and extend 3/16" into the groove in the back assembly, as in Fig. 9a. (This will leave a ⅛" gap for the bottom to expand into.) As for its length, I didn't worry about leaving any gaps in the grooves in the end assemblies because the wood really won't expand along its length.

With the panel glued up and sized, the last thing to do is drill four sets of ⅜"-deep holes to hold some shelf pins. To make sure all the pins ended up level with each other, I used a simple "story stick." And as you can see in Fig. 8, I put a temporary cleat in the groove for the bottom to set the story stick against.

CASE ASSEMBLY. At this point, you're ready to assemble the case, as shown in Figs. 9 and 10. Normally, a case assembly like this can get a little frantic. Not this one. It's glued up one section at a time, so you won't even need an extra pair of hands.

The first thing I did was to *dry* assemble the front face frame with the end assemblies, as in Fig. 9. Then I slid the bottom panel in from the back to see how it fit. The thing to watch here is the center. A panel this long can sag noticeably. So when you apply glue, you may need to force the panel up with hand pressure so it's level across its entire length. When I was satisfied with the fit, I pulled the bottom away from the front rail and applied a thin bead of glue. Then I slid it back in place and applied the clamps.

As the glue is drying, you can cut a small *bottom cleat (P)* and glue it under the bottom to provide additional support, as shown in Fig. 9.

When the glue is dry, you can glue the end panels in place — one at a time, as in Fig. 10. Simply remove the clamps, apply some glue to the front edge, and clamp the assembly back in place. Just be sure you don't add glue to the groove for the bottom. The solid wood panel should be free to expand and contract.

The last section to add is the back. Again, the glue is applied to the ends, not the groove for the panel. In fact, there should be a little gap in back for the panel to expand into, as you can see in Fig. 9a.

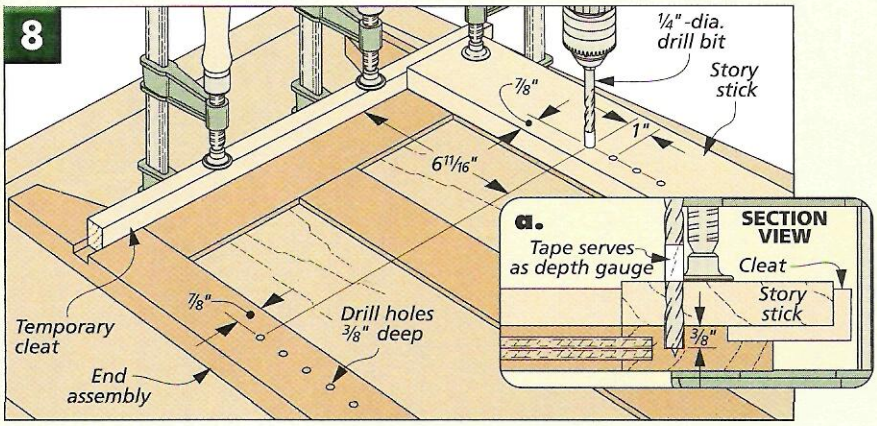

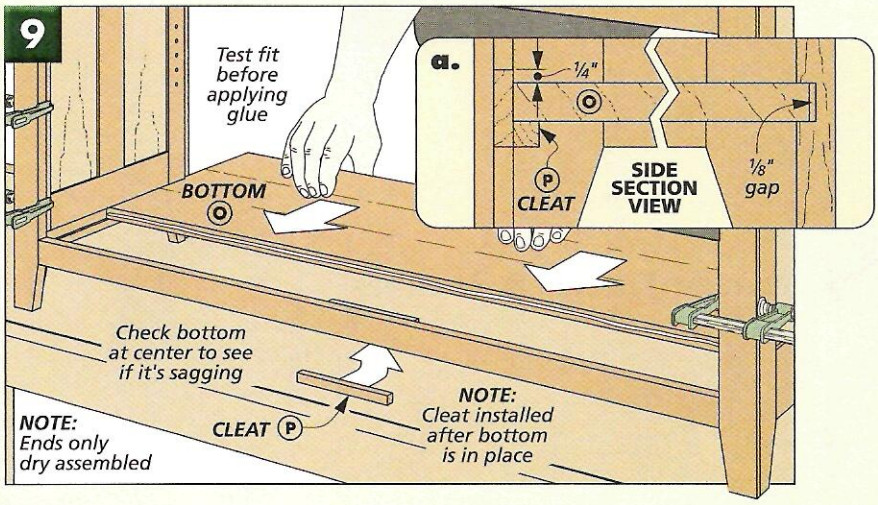

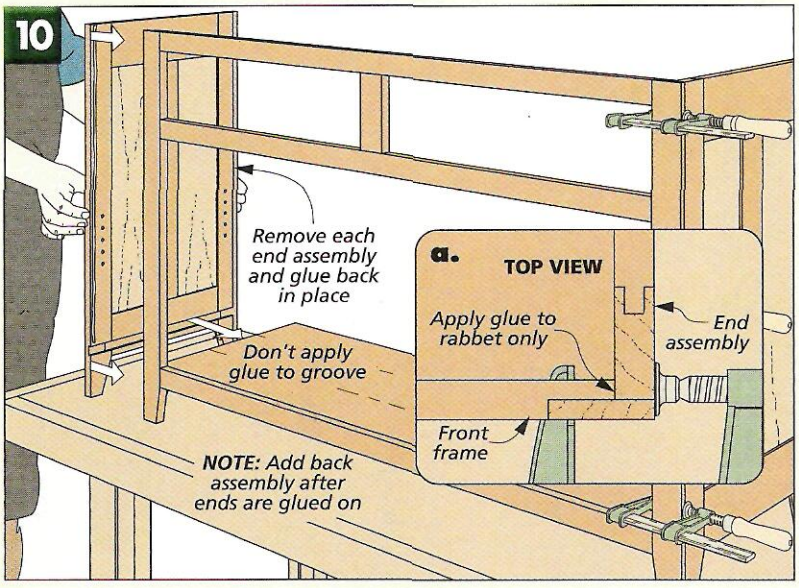

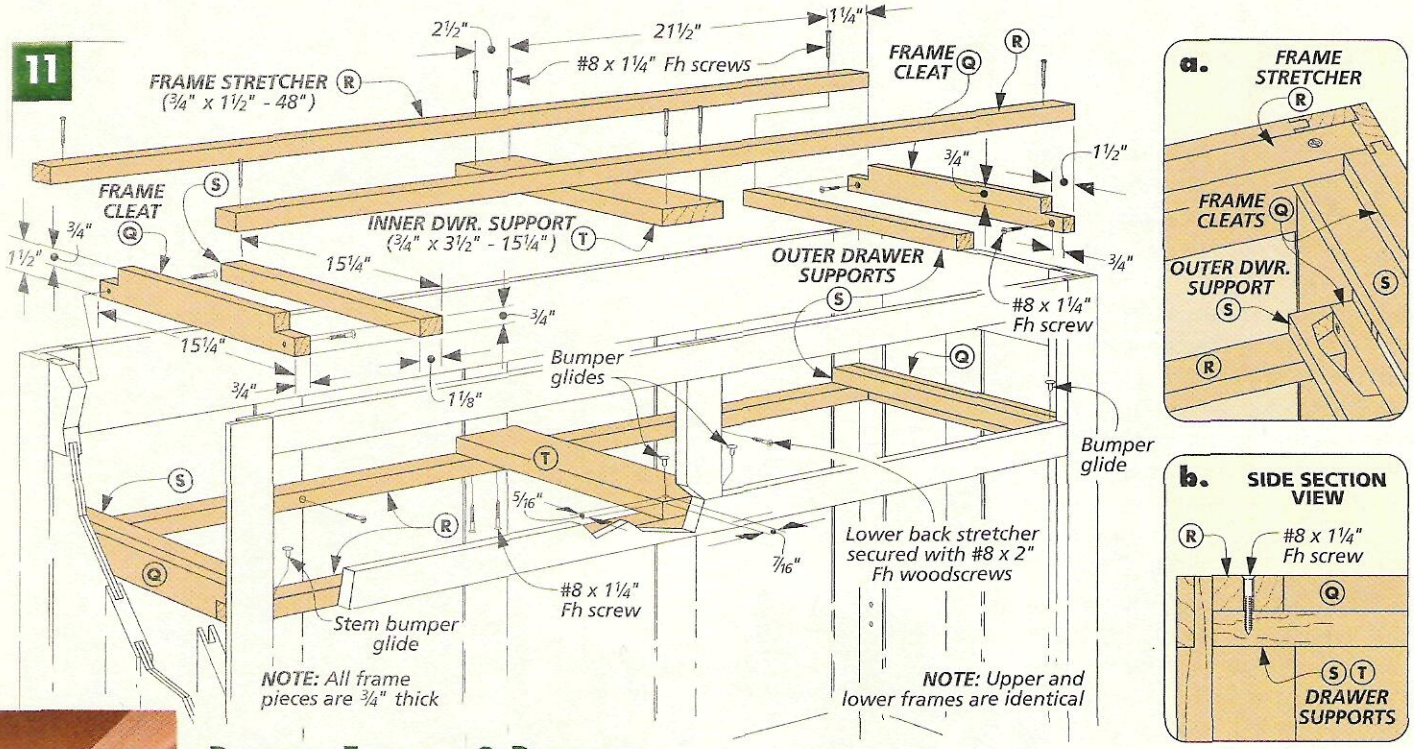

▲ *Plastic "stem bumper glides" are added to the front of all the lower drawer supports (and top, back corners of the drawers) so they slide in and out of the case smoothly.*

Drawer Frames & Drawers

At this point, the case is assembled, but it's not ready for the two drawers quite yet. There isn't any way to support them inside the case. That's the job of the drawer frames that are added next, as shown in Fig. 11.

These frames couldn't be any simpler to build. For one thing they're identical. And each frame starts out as two cleats and two stretchers that are added to the case one piece at a time. Then three drawer supports are screwed to each frame.

Why two sets of frames? The answer is that the drawer will ride on the bottom one. And the top frame keeps the drawer from tipping out as it's pulled open.

FRAME CLEATS. The pieces to start with are the four ¾"-thick *frame cleats (Q)*. These will be screwed to the ends of the case to support the stretchers, as shown in Fig. 12.

The only thing to do to the cleats is to cut a notch on each end to hold the stretchers. And these notches are easy to create at the table saw. I set the cleats on edge (supported by an auxiliary miter gauge fence) and used a dado blade raised ¾" high (the thickness of the stretchers). Then I simply cut the 1½"-wide notches in multiple passes.

Installing the frame cleats inside the case is no big deal either. As you can see in Fig. 12, the lower cleats should be positioned so they are flush with the bottom of the drawer opening. And the upper cleats should be flush with the top of the drawer opening. You'll just want to make sure that the notches are oriented up on the upper cleats and down on the lower cleats.

FRAME STRETCHERS. With the cleats in place, the *frame stretchers (R)* can be cut to size. These span the length of the case and are sized to fit into the notches cut in the cleats.

Because these stretchers are so long, I wanted to make sure they weren't going to sag in the center. So in addition to gluing them into the cleats, I also attached them to

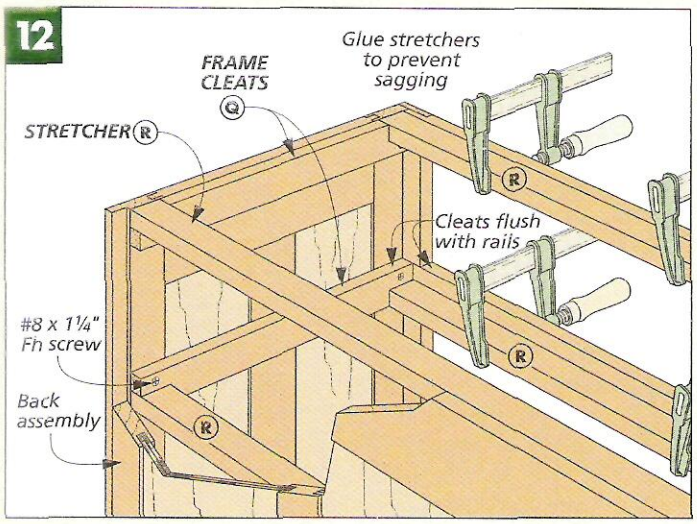

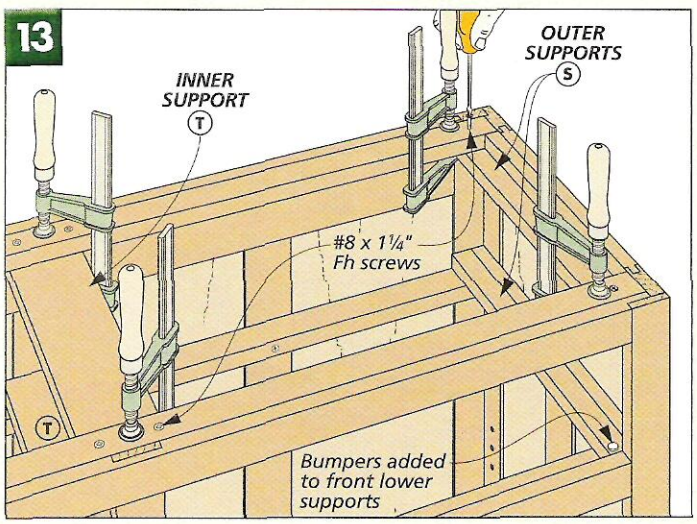

the case. The lower back stretcher is glued and screwed into the center stiles, as noted in Fig. 11. The other stretchers are simply glued and clamped to the rails, as in Fig. 12.

SUPPORTS. Now you can cut the four *outer (S)* and two *inner drawer supports (T)* to size, as in Fig. 11. Before screwing the lower supports in place (Fig. 13), I drilled some holes near the front and pressed in plastic stem bumper glides so the drawers will slide smoothly, as shown in the margin photo at left.

DRAWERS. Like the rest of this project, I kept the drawers as simple as possible. As you can see in Fig. 14, the 1/2"-thick *fronts (U)*, *backs (U)*, and *sides (V)* are cut to size so there's a 1/16" gap on each side of the drawer. And the pieces are joined with a tongue and dado joint. Dadoes are cut across the sides first. Then a matching tongue is cut on the ends of the front and back pieces. Finally a groove for a 1/4" plywood *bottom (W)* is cut in all four pieces (Fig. 14a), and the drawer can be glued together.

The drawer looks like there's a frame and panel on the front, but as you can see in Fig. 14, these are just 3/16"-thick pieces of applied *trim (X)* that are cut to size and glued to the front of the drawer. Then you can add the two knobs to each.

GUIDES & RUNNERS. To guide the drawers in and out of the case, there are some guides and runners to add. The two *guides (Y)* are sized to fit under each drawer bottom, as in Fig. 15. (My guides ended up 1/4" thick.) When gluing these strips to the bottom of the drawer, I used a 1"-thick spacer (the same thickness as the runner) and a square to position them. Then I cut a notch in the bottom edge of the drawer back and added a couple bumper glides to the upper back corners (Fig. 14b).

With the guides in place, you can make the *runners (Z)* that go in the case. These are 1"-thick pieces that are cut to length to fit in the case front to back. And they have notches cut in them just like the frame cleats earlier. But this time, you want the top of the cleat to stick up 1/4" above the front rail (Fig. 16a).

Installing each runner in the case is easier than you might think. I set it in place and slid the drawer over the top of it. Then when the drawer was centered in the opening, I reached under and marked the position of the runner, as shown in Fig. 16. Then it can be attached with screws and a stubby screwdriver.

The last thing to do is add *stops (AA)* to the back of the case. The goal here is simply to make sure the front of the drawer ends up flush with the front of the case (Fig. 14a).

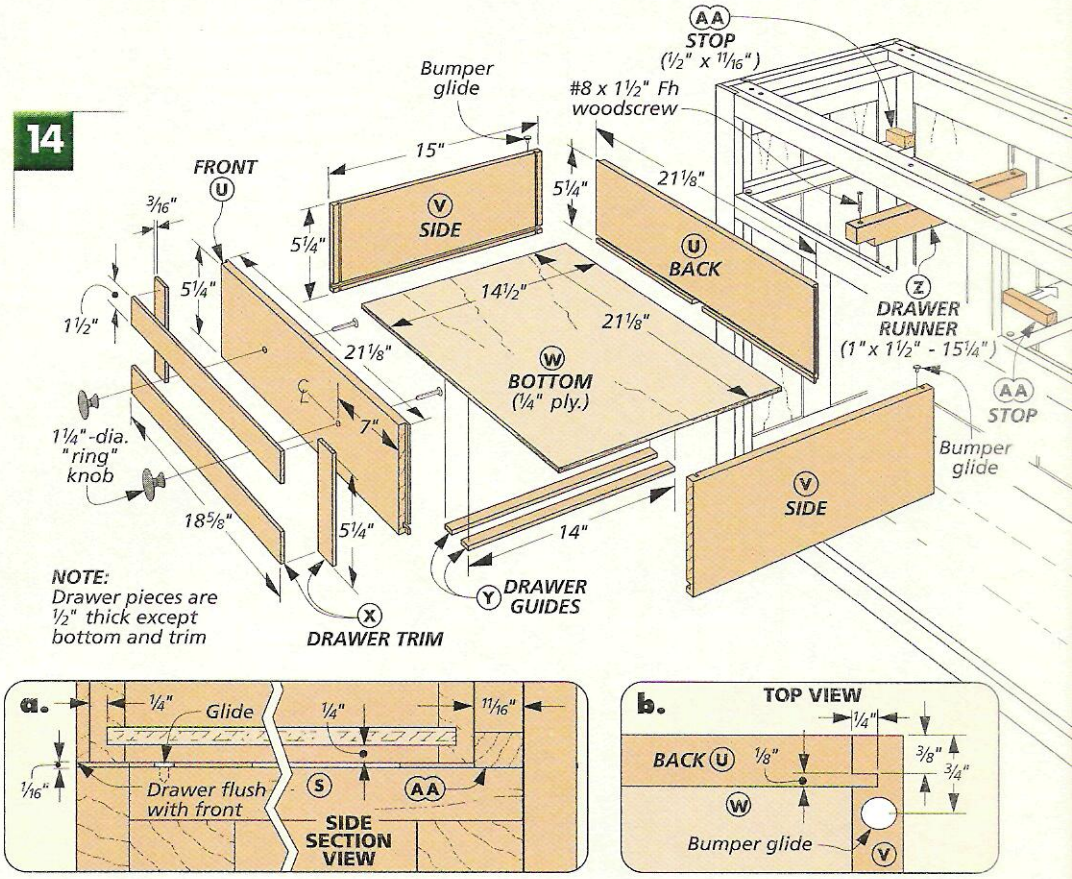

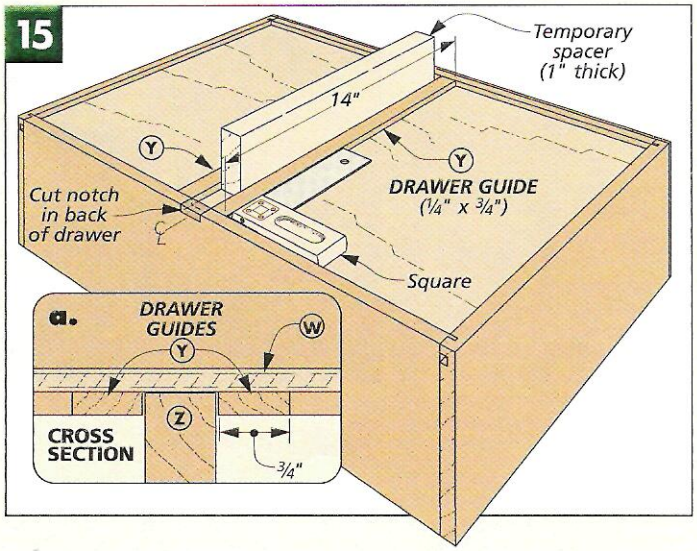

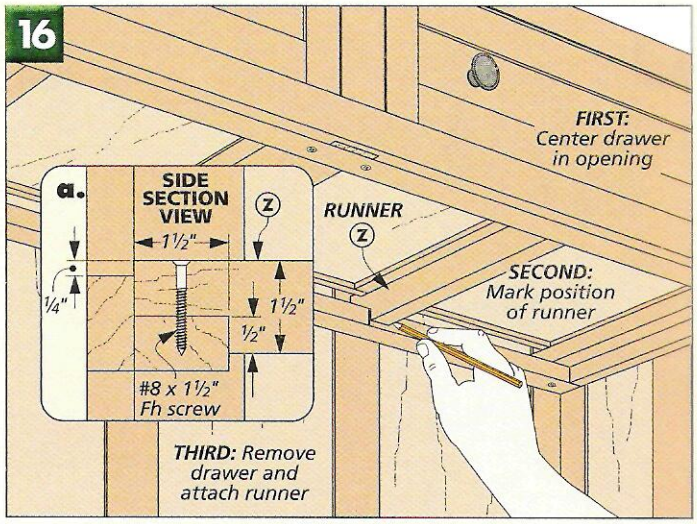

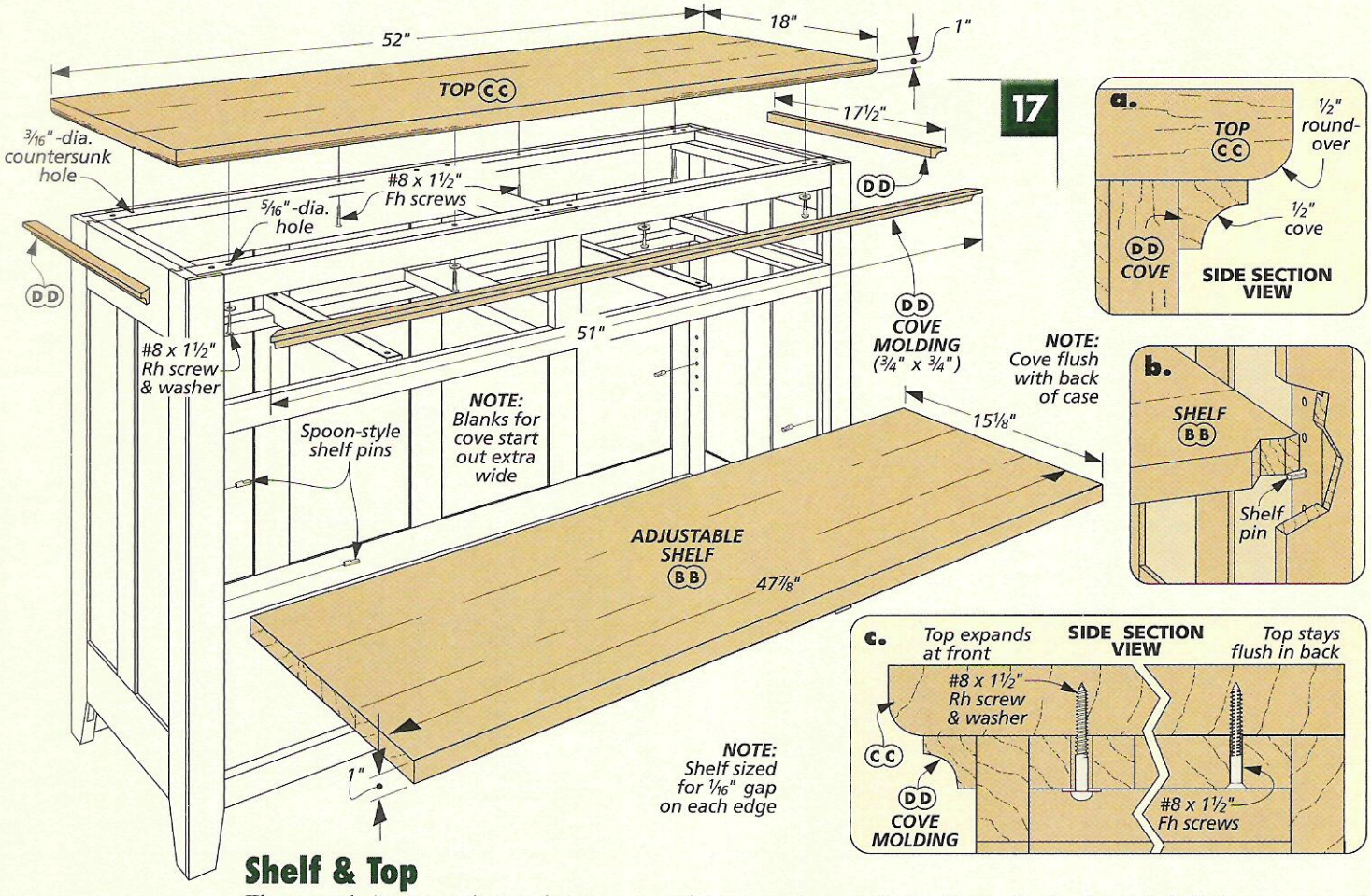

Shelf & Top

The console is pretty close to being complete. All that's left is to add the shelf, top, and some cove molding.

GLUE UP PANELS. The first thing I did was to glue up panels for the *shelf (BB)* and *top (CC)*, as shown in Fig. 17. I decided to use 1"-thick stock here. The top looks better with a thicker edge. And the shelf has less of a tendency to sag in the center.

SHELF. The shelf is going to expand just like the bottom, so when sizing it, I allowed for a 1/16" gap at both the front and back. (There also has to be a 1/16" gap at each end so it will fit over the spoon-style shelf pins that are shown in Fig. 17b.)

TOP. The top is sized to overhang the case 1¼" at the front and each end. (It's flush with the back, as in Fig. 17c.) And the lower, front edge and ends have a ½" roundover.

Before you can mount the top, there are two things to do. First, shank holes will need to be drilled in the frame stretchers, as in Fig. 18. But note that I used different screws at the front and back. A flathead screw is used in the back to hold the panel flush with the case (Fig. 17c). In the front, I drilled an oversized hole and used a roundhead screw (and washer). This way, the panel can expand and contract at the front.

The second thing to do is add *cove molding (DD)* to the front and sides. (By doing this now, you don't have to put nails through the molding.) The molding has a ½" cove and is mitered to wrap around the case, flush with the top, as in Fig. 19.

When you've sanded the molding flush with the case, you can apply the finish and then screw the top down, as in the photo below. W

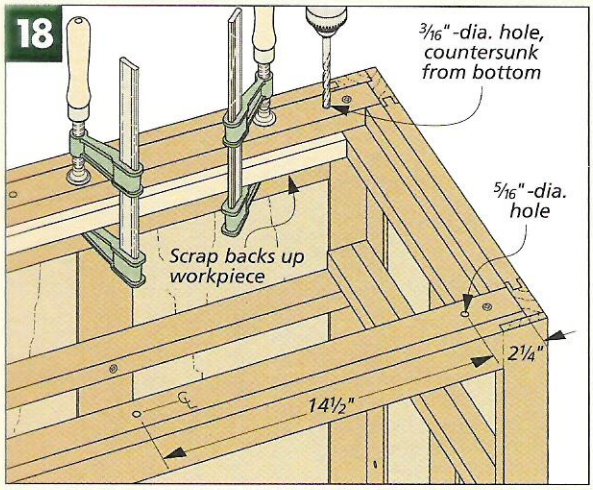

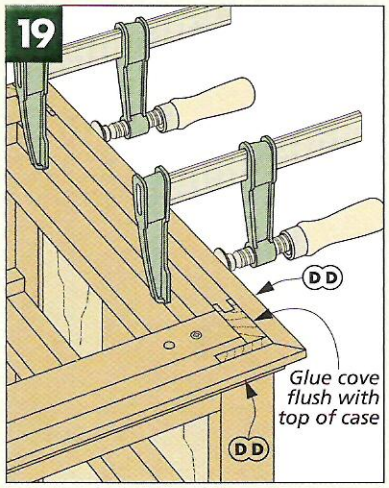

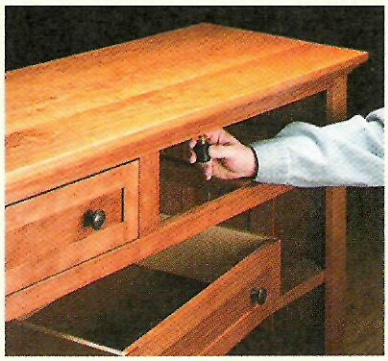

▲ *To prevent the wide top panel from cupping, I applied several coats of finish to both faces before screwing it to the case.*

SHOP NOTES

Cutting Tall Shoulders

Both the Craftsman wall shelf and storage bench have pieces with four shouldered tenons. Normally, cutting the top and bottom shoulders is just another table saw task.

But the arms and top rail of the storage bench and the top rail of the wall shelf have profiles that create really tall shoulders. And this was a little different challenge. I had to decide whether to cut the tall shoulders before or after the pieces were cut to shape. And then how to do it.

I've never had much luck cutting a really clean, tall shoulder on the table saw. If the blade is just a bit out of square, has a little runout, or you push too hard against the fence, the cut can be too deep. At best you might have a bad fit, at worst the piece might be ruined.

But trying to run these pieces through the saw after they were cut to shape didn't seem like a good idea. So I used a couple different methods to solve this problem.

TABLE SAW & CHISEL

On the top rail of the Craftsman wall shelf I rough cut the top shoulders on the table saw before I cut the piece to final shape. And then I finished them up with some hand work.

As you can see in Fig. 1, I used the same setup (after raising the blade) that was used to cut the cheeks and bottom shoulder.

The only difference is that you don't want to cut clear up to the shoulder. Using an auxiliary fence on the miter gauge to steady the piece, start at the outside of the tenon and nibble toward the shoulder, leaving a short step (Fig. 1a).

Now after the top bevel is cut, you can finish up with a sharp chisel. This is pretty straightforward. Just take light cuts and work down to the shoulder. As you can see in the photo at right, I came in from an angle using a slicing motion. If the chisel is sharp, the tough end grain will "curl" away easily.

BACK SAW & CHISEL

On the arms and back rail of the storage bench the deep curves of the profiles would have created really long shoulders. So it made more sense to cut the pieces to shape and then cut the shoulder completely by hand.

After the pieces were shaped, I used a small back saw to rough cut the shoulder. As you can see in Fig. 2, the first cut is down from the end of the tenon to the shoulder line. Stay back from your layout line and don't cut too deep.

Now cut down along the shoulder line to remove the waste (Fig. 3). Be sure to stay away from the shoulder so the saw teeth don't chew up the clean shoulder line.

▲ *A sharp chisel makes paring away the step easy. Just take a shallow cut and the wood will "curl" away.*

The final cleanup goes just like that described for the top shelf rail. But after you clean up the shoulder, you'll also want to use the chisel to clean the top side of the tenon and to form a nice, square edge.

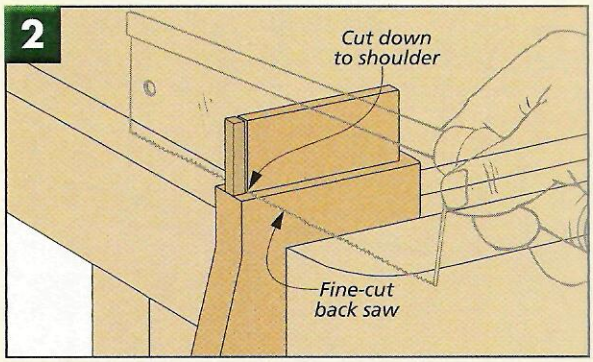

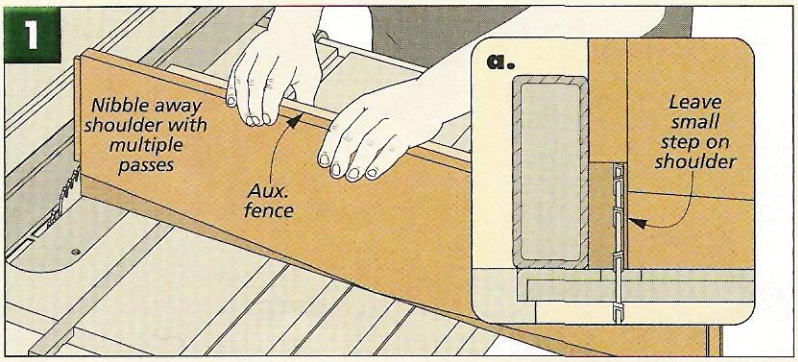

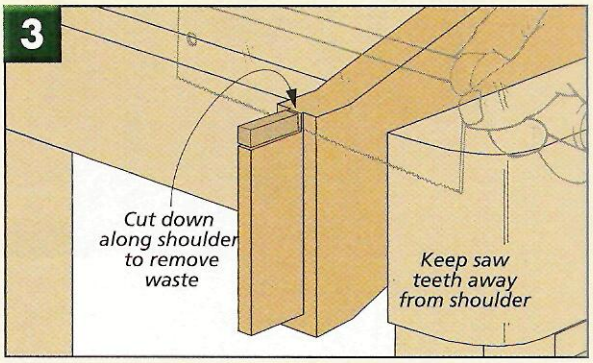

WHEN TO STAIN CHERRY

...& WHEN NOT TO

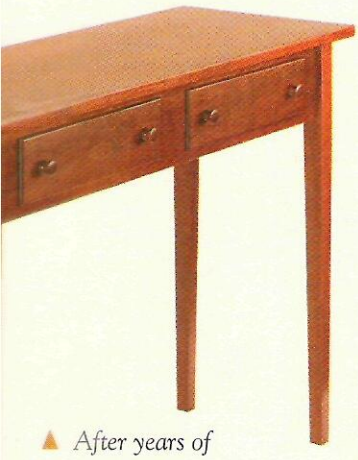

▲ *After years of exposure to natural light, this cherry table has "aged" to a beautiful rich reddish-brown color.*

Get a room full of woodworkers together and ask them whether they like to stain cherry or let it age naturally, and you're likely to start an argument that will last most of the day.

Not only will they argue about stain vs. no stain, but they'll also argue about what type of stain to use, what brand, and what color. It can be a pretty touchy subject.

CHERRY. The thing that can make deciding whether or not to stain cherry, such a head-scratcher is that with cherry what you see isn't always what you get. I can remember the first time I planed a piece of cherry. I looked at it and thought to myself, "How in the world will this light, pinkish-tan piece of wood ever have that rich, reddish-brown 'cherry' color I'm looking for? Well eventually it did, but it took quite a few years and a really large dose of patience on my part.

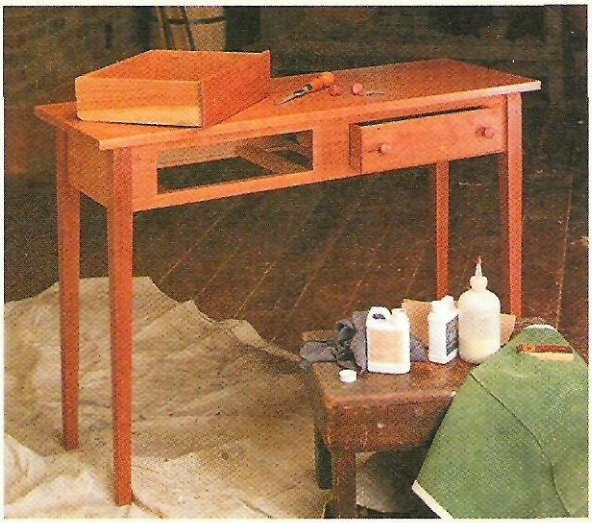

If you want to see what I'm talking about, take a look at the two photos of the Shaker table. The table in the photo above is fresh from the finishing room after just a few coats of rubbed-on oil varnish. The color is a little uneven (notice the darker legs) and just barely hints at that beautiful aged cherry color. But after several years, my patience finally paid off. The same table (photo at left) now has an even, dark, reddish-brown color that you'll usually only see on a true, classic, cherry antique.

What's the secret here? This gradual darkening in color is actually caused by exposure to the sun's ultra-violet (UV) light rays. You'll see it in other woods as well, but in cherry it can be really noticeable and it can start pretty fast. In fact, I'll often see a slight change in the color of cherry even before I'm finished building the project.

So the decision you have to make with cherry is — Do I want to use a natural finish and let time and light do the work, or do I want to speed things along and go with a stain? And it's best to ask yourself this question before you even begin building the your project.

NATURAL FINISH. The reason for this is that if you're leaning toward a natural finish, you want to be pretty picky about choosing and laying out the lumber. I go for the best color match I can get and try to hide or avoid any sapwood. And then I save those really nice boards for the parts that will show the most.

Take the cherry console in this issue, for example. From the beginning, I thought it was a perfect candidate for a natural finish. With its simple lines and minimal detail, a rubbed-on finish really complements the look of this project. I just took a little extra time picking out some really nice pieces of wood. And after rubbing on a few coats of varnish, nature will do the rest.

THE SHORT TERM. If you decide to go with a natural finish, there are a few things you should be prepared for. First, you've got to be willing to take the wood as it is. No matter how careful you are selecting your lumber, there are bound to be some inconsistencies in the color and appearance of the wood.

Take a look at the photo of the console drawers at left for example. You'd probably think I did a pretty poor job of choosing wood for the trim. Well, believe it or not, all the pieces came from the same board. It's just the play of the light that

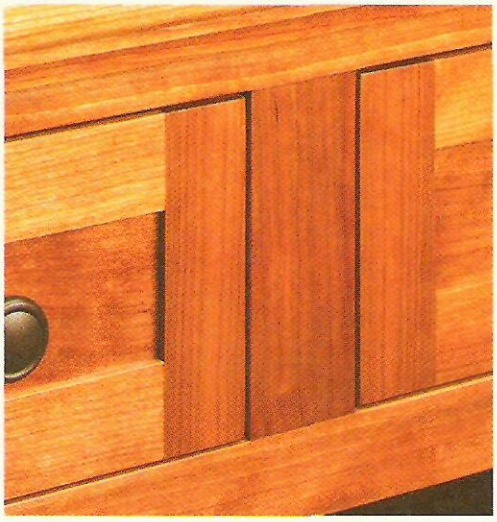

▲ *The drawer trim on the cherry console was all cut from the same board. The light plays differently on the vertical and horizontal pieces.*

causes the color of the horizontal and vertical pieces to look different. After a time all the pieces will blend together, and in the short run it's something I can easily live with.

PATIENCE. Another thing to consider if you plan on using a natural finish is how long you're willing to wait to get that warm, dark cherry color. There are several factors that affect how fast your cherry ages — light exposure, the finish you use, and the wood itself. But you need to be prepared to wait at least a few years to get that "antique" look.

If you want to speed up the process, I've learned that a rubbed-on oil finish that soaks into the wood will darken faster and even a little deeper than a built-up finish like varnish or lacquer. But then if you want to use a heavier finish, just put on a coat of linseed oil or tung oil first to get a little head start.

RESULTS. There's one other thing to consider when using a natural finish and that is the fact that it can be hard to predict how the project will look after it has aged. Although the wood will eventually darken, there's really no way to control how *much* it darkens. So with a natural finish, you are really at the mercy of the wood itself.

STAIN. As nice as a natural finish can look on some projects, there are times when I think it makes more sense to use a stain on cherry. And there are a couple of reasons that might make me decide to take this route.

THE WOOD. Sometimes the wood you are working with will dictate the type of finish you use. Now and then I'll find some cherry that looks so nice it would break my heart to cover it with stain. So I don't. But I'm not always this lucky.

When you shop for cherry, you'll find that much of the lumber that's available today has some color variation and little "defects." Small pin knots, dark sap streaks, and boards with a good amount of light-colored sapwood are common. On a naturally finished piece, the sapwood won't darken and will stick out like a sore thumb. So I'll use a stain as a way to even out the variations in color and hide any defects, as you see in the upper photo at right.

I also like to use a stain whenever I'm building a project that mixes solid cherry with cherry veneer plywood. The plywood is often just enough darker than the freshly planed solid wood to make me reach for the stain can.

DETAIL. Using a stain on cherry has another nice benefit. On a project like the blanket chest shown at right, the stain "tones down" the wood a little bit and allows the beautiful detail of the moldings and the bracket feet to take center stage. On most of my more "formal" pieces, I'll go this route and I'm usually pleased with the result. Plus, you get the bonus of having that classic cherry look without the wait.

Finally, keep in mind that when it comes to finishing cherry, you can't really lose. Whether you decide to use a stain or a natural finish, it's hard to beat the beauty of cherry.

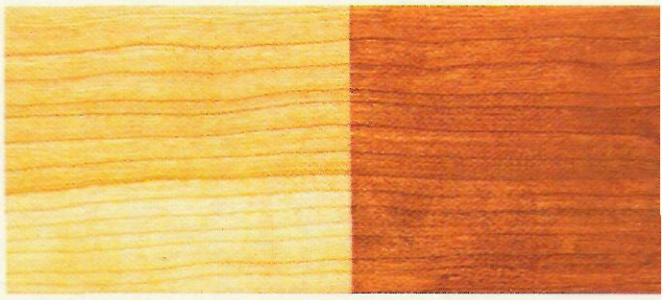

▲ *The light sapwood in this board won't darken with age. But a single coat of cherry stain can hide it.*

▲ *I put a coat of Woodsmith's cherry stain on this blanket chest to even out the color and highlight the details.*

WOODSMITH'S CHERRY STAIN

In the past when I applied thin oil stains to cherry, I had problems with blotching. Thick, gelled oil stains work really well to control this. But since they don't flow like a thin stain, they can be a pain to apply, especially to a large project. So I decided to mix a gelled stain with a thinner oil stain to get a nice color that wouldn't blotch and was easy to apply. After a little experimenting, I cooked up just the right "recipe." Now I use this mixture exclusively on cherry with great results.

Woodsmith Cherry

Ingredients

3 parts Zar Cherry Stain
1 part Jel'd Cherry Stain

- Combine ingredients in a suitable container. Shake or stir until mixture is creamy and lump free.
- Apply with a brush or soft cloth. Let stand 5 minutes. Wipe off excess working with the grain.
- Let dry overnight.

WEEKEND PROJECT

CRAFTSMAN WALL SHELF

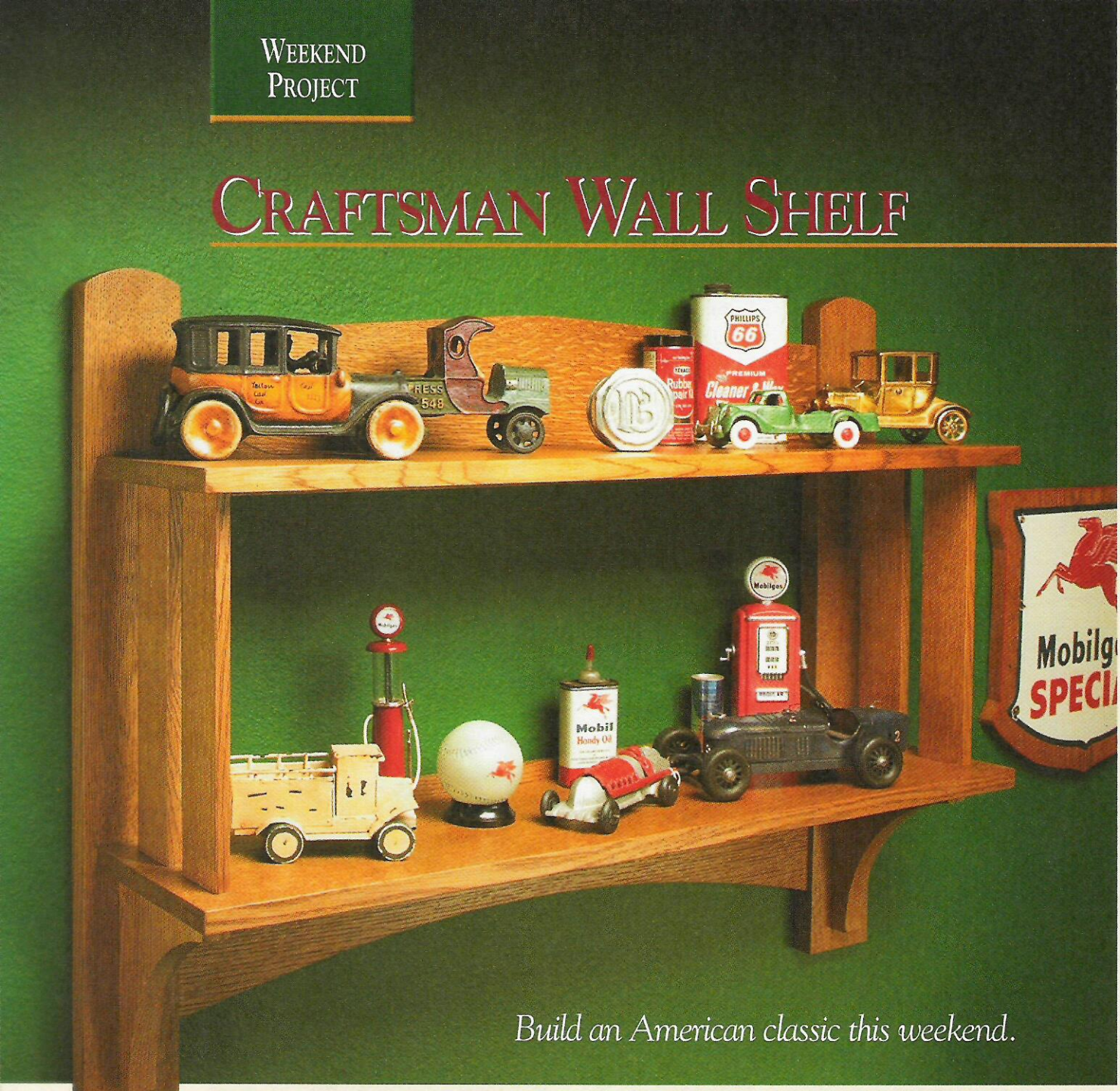

Build an American classic this weekend.

It's always nice when you find a great-looking project that can be built in a weekend or two. One that won't drag on. Or have a complicated assembly. Or require lots of expensive hardware. That's why I like this shelf. It's straightforward to build, and you get to spend some productive time in the shop — and end up with a handsome project in a short time.

Before starting, I should mention something about the wood. This shelf is built with quartersawn white oak (the traditional choice for Craftsman furniture). But just about any wood can be used.

Also, while you won't need a lot of boards for this shelf, be aware that it requires three different thicknesses (1/2", 3/4", and 1"). So if you don't have access to a thickness planer, make sure you can get all three thicknesses before getting started.

FRAME

The "foundation" of this wall shelf is a simple frame. As you can see in Fig. 1 on page 19, there are just a couple stiles connected with upper and lower rails. You may have noticed by now that the frame pieces aren't all the same thickness. As you can see in

MATERIALS

A	Stiles (2)	1 x 3 1/2 - 28 1/16
B	Upper Rail (1)	3/4 x 6 1/2 - 31
C	Lower Rail (1)	3/4 x 7 1/4 - 31
D	Shelves (2)	3/4 x 8 - 36
E	Uprights (4)	1/2 x 2 1/4 - 12 1/2
F	Brackets (2)	1 x 6 - 7 3/4

- (14) #8 x 1 3/4" Fh Screws
- (2 pr.) Mounting Clips
- (8) #6 x 5/8" Fh Woodscrews
- (8) #8 x 2" Fh Woodscrews

Woodsmith GO ON-LINE EXTRAS

To download a free Cutting Diagram for this project, go to:

www.Woodsmith.com

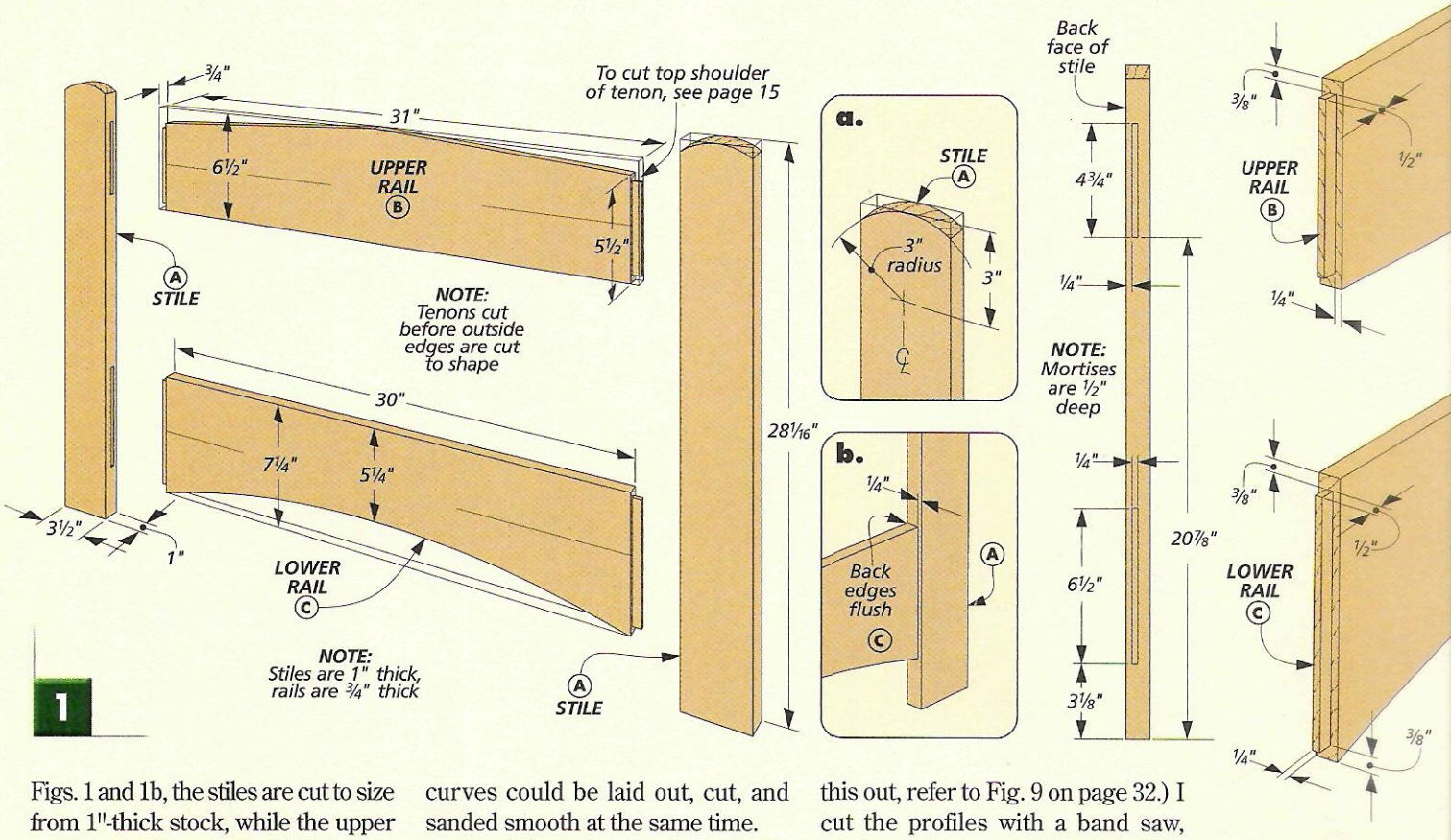

1

Figs. 1 and 1b, the stiles are cut to size from 1"-thick stock, while the upper and lower rails are only 3/4" thick.

There are just two things to do to the *stiles (A)*. First, I worked on the mortises. Because the frame pieces are different thicknesses, the mortises aren't going to be centered on the stiles. What you want is to offset them so the frame ends up with a 1/4" shoulder at the front of the frame and all the pieces are flush at the back, as in Fig. 1b.

There's no particular method you need to use to create these mortises. I like to drill overlapping holes with a Forstner bit and then clean up the walls with a sharp chisel.

The last thing to do to each stile is shape the top end, as in Fig. 1a. I taped the stiles together with double-sided tape. This way, both curves could be laid out, cut, and sanded smooth at the same time.

RAILS. Next, the *upper rail (B)* and *lower rail (C)* can be glued up from 3/4"-thick stock and cut to final size. Then you can cut tenons to fit the mortises you cut earlier. I did this at the table saw with a *regular* blade. This meant making a few extra passes for each tenon, but I did this because the shoulder cuts on the top of the upper rail are too deep to cut with a dado blade, as in the drawing in the right margin.

With the tenons roughed out, the profiles can be cut. The upper rail has tapers that meet at the center. The lower rail gets a curve. (To lay this out, refer to Fig. 9 on page 32.) I cut the profiles with a band saw, staying to the waste side of the line and then sanding the edges smooth, as in Fig. 2. When this is done, you can clean up the top and bottom shoulders of the tenons with a chisel, as described on page 15.

Before gluing up the frame, the last thing to do is to cut a wide, shallow groove across the back face of the upper rail, as in Fig. 3. Later, this groove will hold the mounting clips for hanging the shelf on the wall.

For now, the frame can be glued together, and you can drill the countersunk shank holes for attaching the shelves later, as in Fig. 4 below.

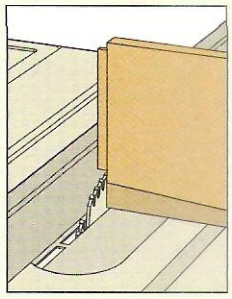

▲ *The upper shoulder on the upper rail is cut different than the others, see page 15.*

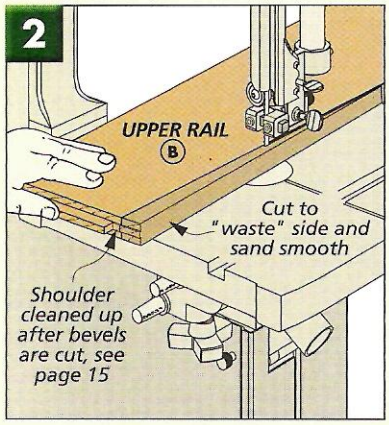

2

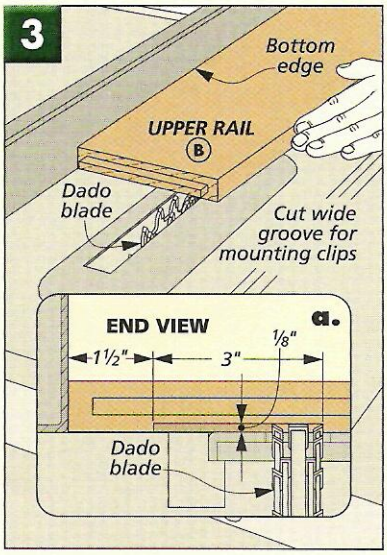

3

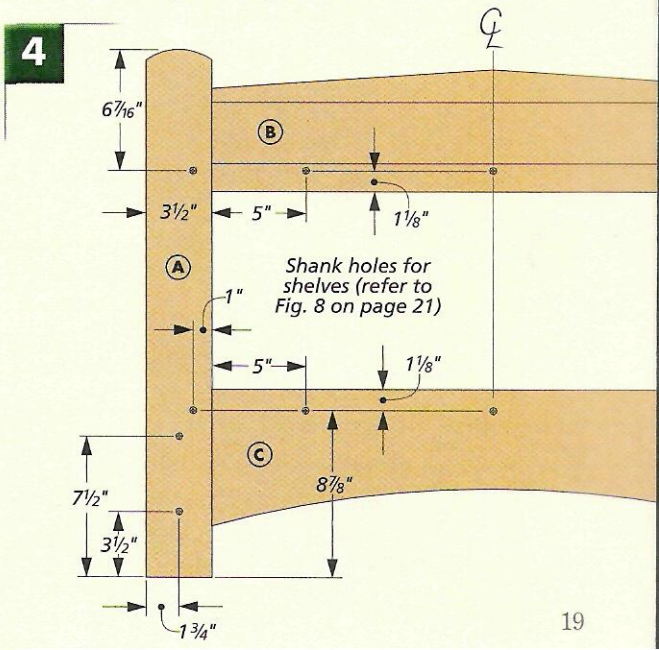

4

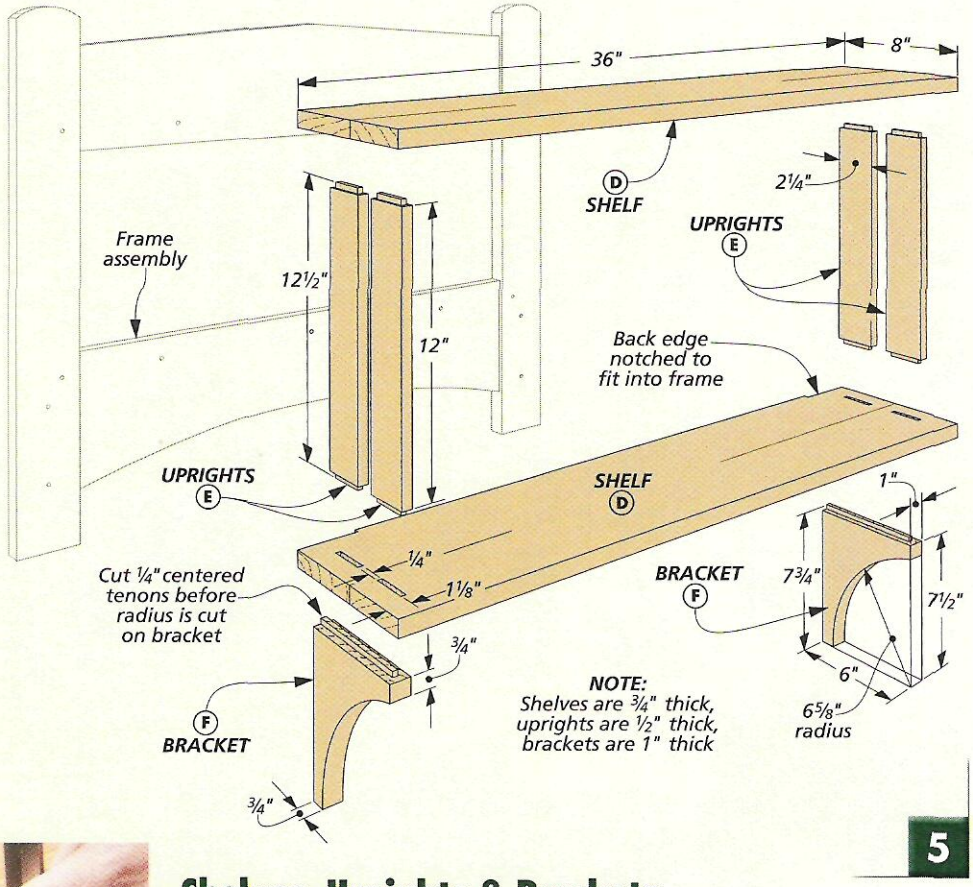

5

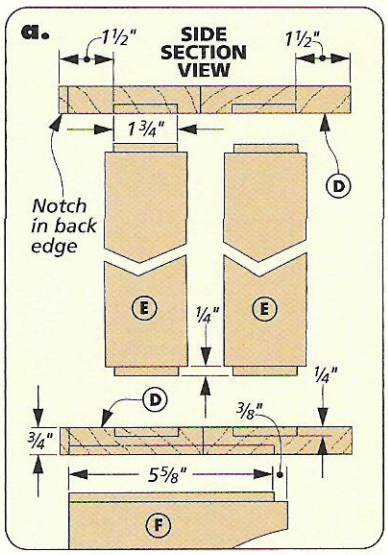

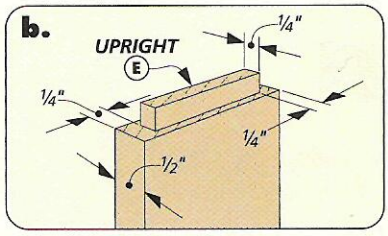

▲ *Just like all the mortises, the long, stopped dadoes for the brackets are created by drilling overlapping holes and then cleaning them up with a sharp chisel.*

Shelves, Uprights & Brackets

With the frame complete, the next pieces to add are the shelves, as in Fig. 5. They're connected at each end with two uprights and supported on the bottom with a curved bracket.

SHELVES. Like the rails earlier, you'll want to glue up the two *shelves (D)* from ¾"-thick stock. Then they can be cut to length so they are 1" narrower than the frame (Fig. 5).

The first thing to do to the shelves is cut some notches that allow them to fit against the frame without any gaps. This can be done easily at the table saw with a dado blade and a tall auxiliary miter gauge fence, as in Fig. 6 below. Just sneak up on the size of the notches until the shelves fit between the stiles in the frame and there's no gap between the shelf and rail, as shown in Fig. 6a.

All that's left for the shelves now is to cut mortises for the vertical uprights and a stopped dado for the bracket. I made all of these like the mortises in the frame earlier, as shown in the margin photo at left.

UPRIGHTS. The two shelves are connected by four ½"-thick *uprights (E)*, as in Fig. 5. After cutting them to size, the tenons are cut to fit the mortises in the shelves, as illustrated in Figs. 5a and 5b.

BRACKET. The last parts to work on are the two *brackets (F)* that support the bottom shelf. These are cut to finished size from 1"-thick stock.

Before cutting the curves on these brackets, you'll want to create the tenon on top, as in Fig. 7. After cutting the cheeks, you can sneak up on the shoulder in *front* until the bracket just fits the stopped dado in the bottom shelf *and* is flush at the back, as you can see in Fig. 7a.

ASSEMBLY. At this point, the shelves, uprights, and brackets can be added to the frame. There's no need to work with all these pieces at once. You can start by gluing the two brackets to the bottom shelf.

Now the bottom shelf can be added to the frame. To center the shelf on the holes already drilled in the frame, you can clamp a temporary, ¾"-wide cleat flush with the top edge of the lower rail, as shown in Fig. 8. With the cleat and the notches in the bottom shelf, you don't have to worry about position-

6

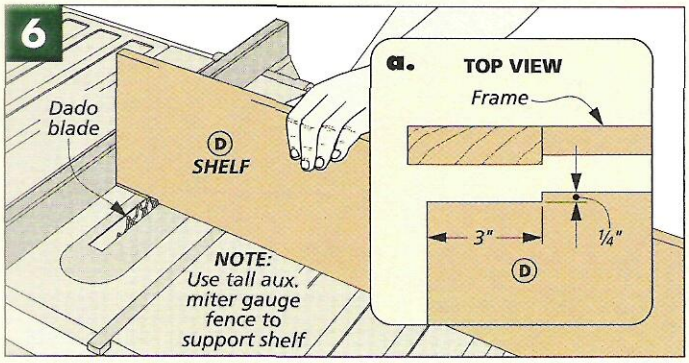

7

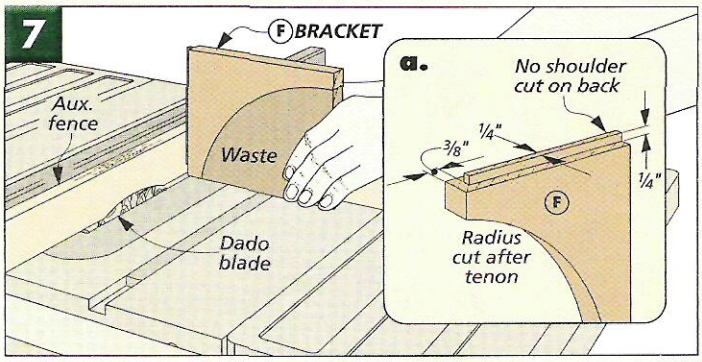

ing (or leveling) the shelf. Just glue and screw it in place, as in Fig. 8a.

The next step is to add the uprights and the top shelf (Fig. 9). The uprights are just glued in place, while the top shelf is glued and screwed to the frame.

OPTIONS & FINISH. Now that the wall shelf has been assembled, it's time to apply the finish. (Note: There are two design modifications you might want to consider first, see the box below.) Since most Craftsman-style projects were originally fairly dark, I applied *Minwax's* Aged Oak gel stain. Then you can apply a few coats of a clear topcoat.

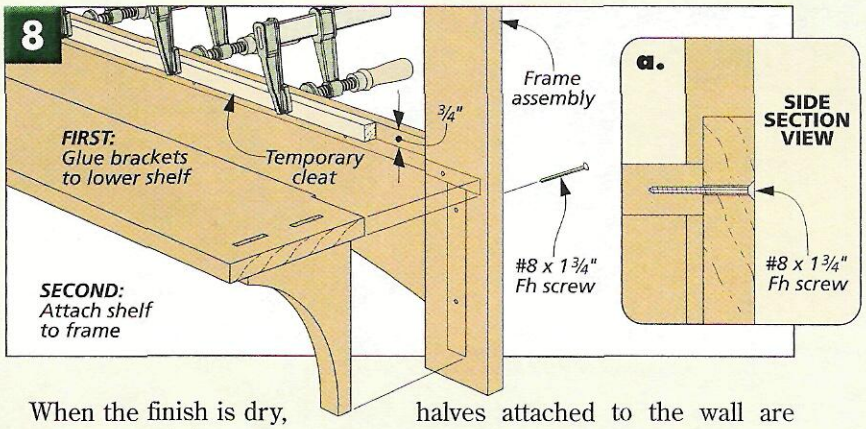

When the finish is dry, hanging the shelf is easy. I used mounting clips with identical interlocking halves, as you can see in Fig. 10. Just make sure the two halves attached to the wall are screwed into studs with their "points" up (and level). Then screw the other two ("points" down) in the groove on the back of the shelf. W

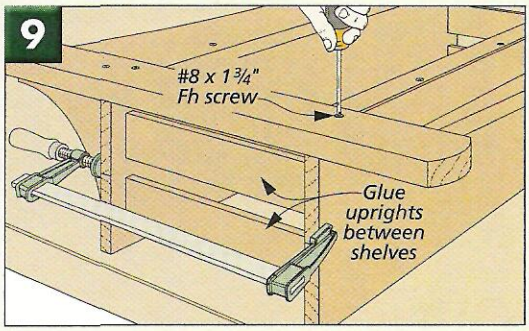

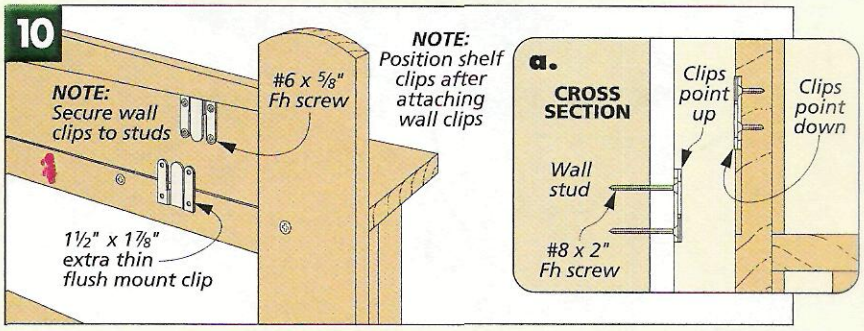

TWO DESIGN OPTIONS

Here are a couple design options you might want to consider for this wall shelf. In the photo below, a beaded panel back has been added. The photo at right shows a shelf with a beveled mirror. Neither modification will give you any trouble.

For both options, the first thing you'll need to do is rout a rabbet in the back of the frame, using a hand-held router and a rabbeting bit. But note that the rabbets aren't the same size.

To make the beaded panel option, you'll want to make (or purchase) some beaded boards, as described on page 26. To hold these in place, I centered a single nail on each board. (Allow enough room for each to expand and contract.)

For the mirror option, I ordered a 1/4" mirror with a 1 1/2"-wide bevel. (Allow for a 1/8" gap on each side.) Then I made some stop to hold it in place and set it on 1/8"-thick spacers.

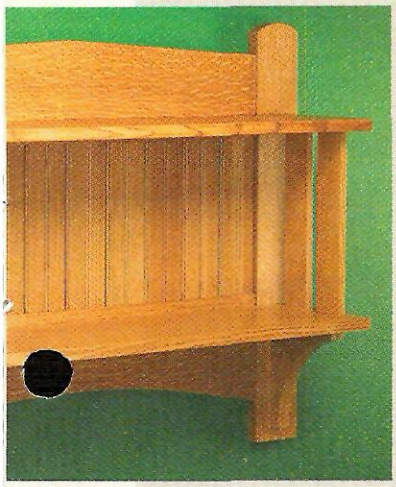

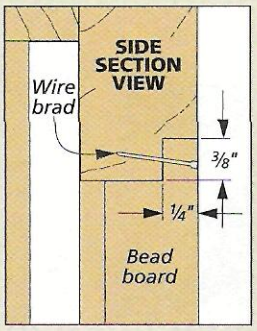

▲ *Rabbet the face of the bead boards so they're flush with the back. Then nail them in place individually.*

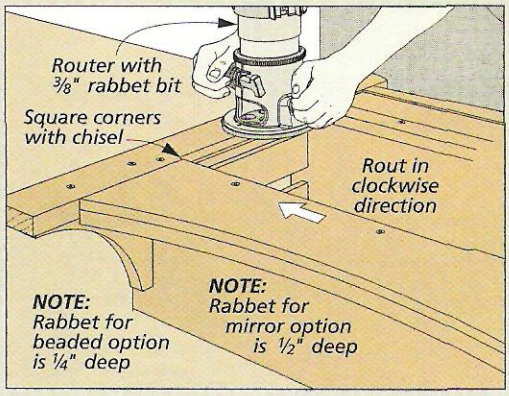

▲ *With both options, a rabbet is routed with a 3/8" rabbeting bit. (The depths are different.) Then the corners are squared up with a chisel.*

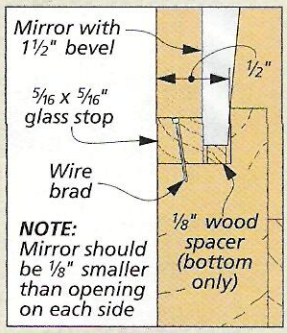

▲ *Before securing a mirror with stop, drill holes for the brads and set the mirror on 1/8" spacers to center the bevel.*

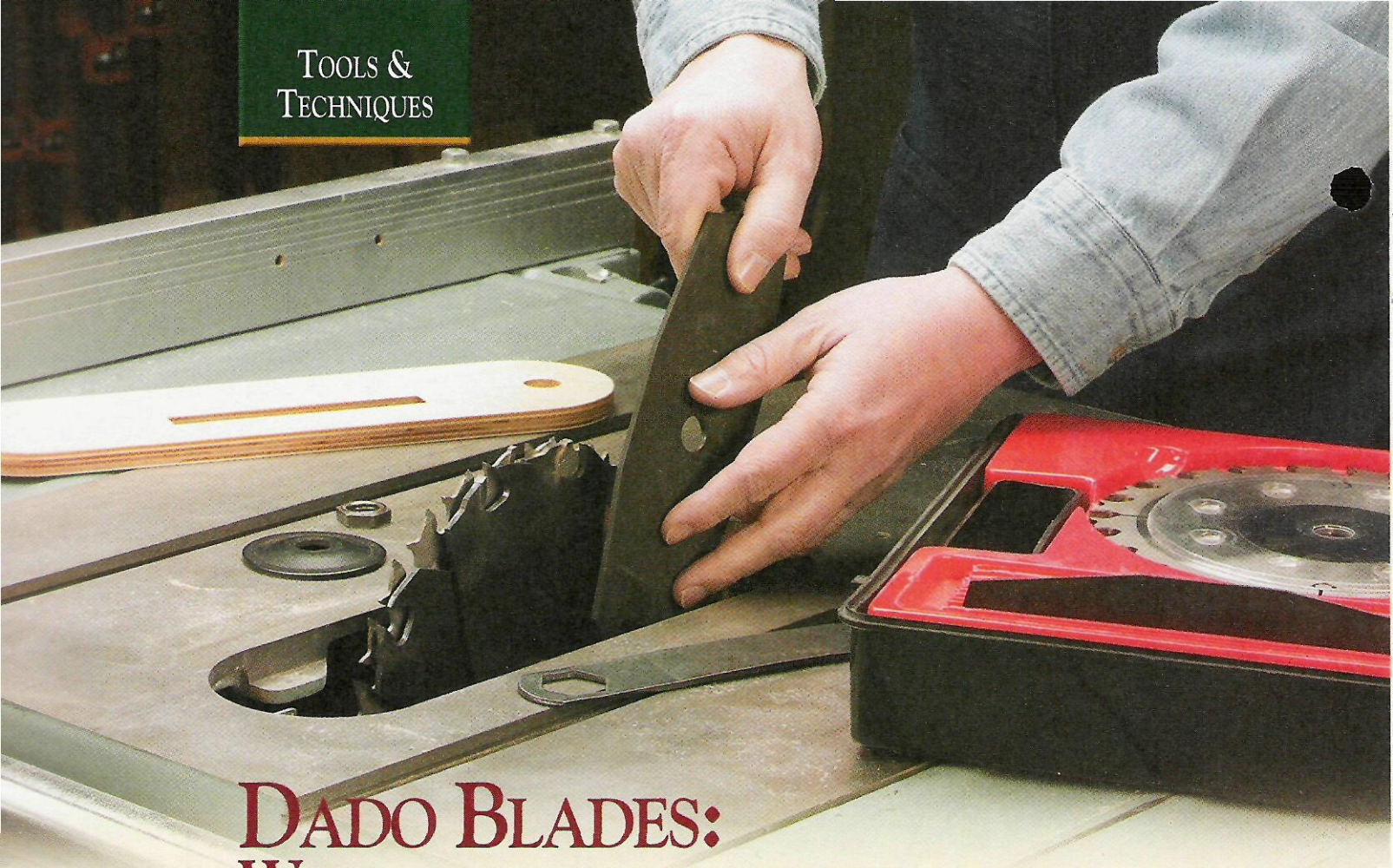

DADO BLADES: WHAT YOU NEED TO KNOW

If I had to make a short list of shop accessories that I wouldn't want to be without, my dado blade would be near the top. In my shop it seems like every other step (or more) in a project involves the dado blade. And it's not just for cutting dadoes and grooves. It's more like a one-stop joinery station. I use it to cut tenons, tongue and grooves, box joints, half-laps, rabbets, moldings, and more. It can be a really versatile tool.

Take the cherry console on page 6, for example. I put the dado blade to work right off the bat; cutting the centered grooves in all the stiles and rails. A couple passes for each groove, and I was done. Now what about all the tenons? Just a little bit wider setup with an auxiliary fence, and they were cut in pretty short order. And then came the rabbets that join the frames — again with the dado blade. Finally I needed to cut some half-laps to join the front frame pieces. And how do you suppose I did it? Just one guess.

But don't get the wrong impression. I don't use a dado blade because I'm lazy. I use it because it allows me to do a high-quality job with the least amount of work.

Basically, all a dado blade does is cut an extra wide kerf. This seems pretty simple, but there's more to it than you might think. All dado blades aren't the same, and if you've never used one or are new to them, you probably have a few questions. What type of dado blade should I own? (There are several types and sizes.) How much should I pay? And how do I set it up to use it? These are all good questions and deserve some good answers.

TYPES OF DADO BLADES. There are really just two basic types of dado blades — the adjustable type and the stacking type. Both have been around for a long time and have their advantages and shortcomings.

ADJUSTABLE OR STACK?

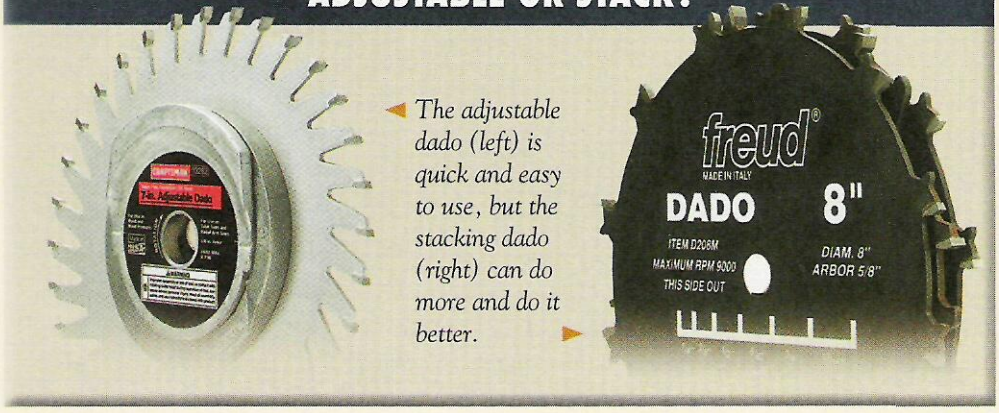

The adjustable dado (left) is quick and easy to use, but the stacking dado (right) can do more and do it better.

Adjustable Dado

At some time in the past, the adjustable dado picked up the nickname "wobble" dado (also called the drunken blade). And if you've ever used one, you can understand why.

HOW IT WORKS. An adjustable dado is just a single blade mounted on a beveled hub. As the tilted blade spins on the arbor, it looks like it's wobbling. And instead of each tooth cutting one behind the other, each tooth traces a different path and cuts at a different spot. So what you end up with is a wide cut. You can adjust the width of the cut (the amount of "wobble") by turning the blade on the hub to change the tilt. It's really pretty simple.

PLUSES. And for me that's the main attraction of the adjustable dado — simple setup and adjustment. You can fine-tune it to make any width cut within the blade's limits (usually 1/4" to about 7/8"), without taking it off the saw. And a second plus is that compared to a good stacking dado they're pretty inexpensive ($20 to $60 for a 7" blade).

MINUSES. But before you run out to buy one, let's look at the down side. My main complaint with adjustable dadoes is that at most settings they won't cut a flat bottom. The better ones are specially sharpened (Fig.1) to cut flat at a specific width (usually 1/2" or 3/4"), but at any other width you're out of luck. In Fig. 1d you can see how the shape of the bottom changes with the width of the cut.

Another drawback can be chipout along the shoulders of the cut. Working with the grain, won't be a problem. But getting a really clean cut across the grain in hardwoods and especially "chippy" plywoods (like the oak plywood in the margin) can be next to impossible. This is really going to be a problem with an inexpensive blade (photo at right).

Basically, you've only got one or two teeth that are responsible for cutting at the outside edges and each point in between. And what's more, the wider the cut, the more "ground" each tooth has to cover. So you can see why an adjustable dado might cut a little rough.

A GOOD CUT. Setting up an adjustable dado is as easy as putting the blade on the saw and "dialing" in a width. Then you'll always want to run a test piece to check the width and depth of the cut. This will also help you fine-tune the fence setting. With an adjustable dado it can be hard to tell where the outside edges of the cut will be.

For the best results just make shallow passes with a slow feed rate. And if you're using an adjustable dado to cut joinery (tenons, half-laps) use the width setting where the blade will cut flat and square.

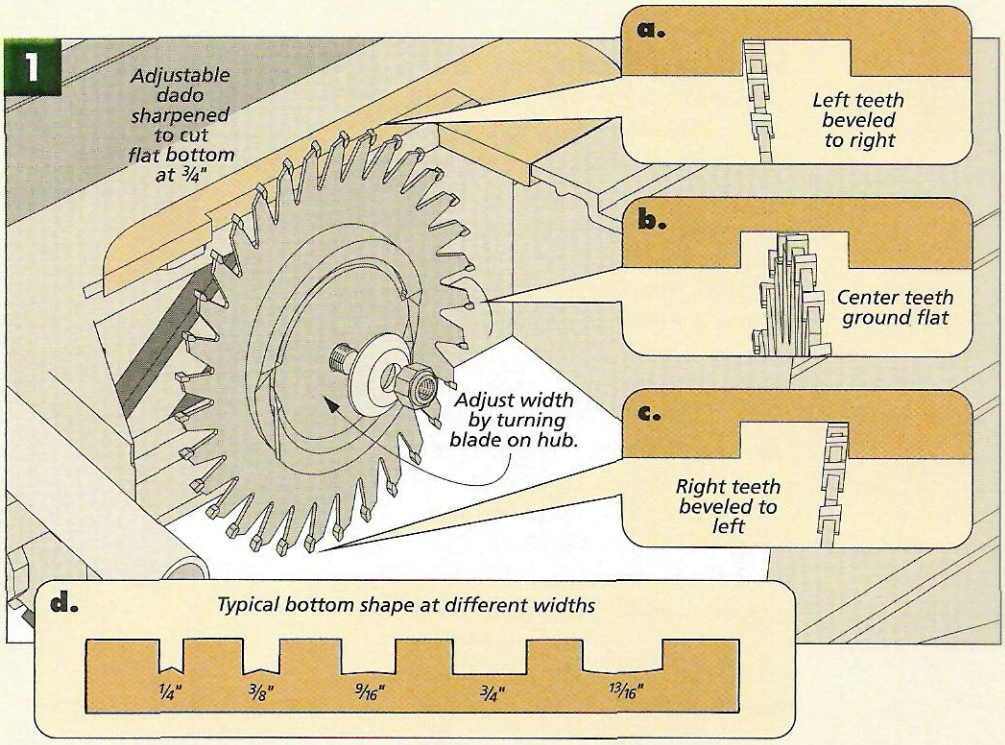

TWIN-BLADE ADJUSTABLE DADO

A couple of companies offer a twin-blade adjustable dado (sometimes called a V-wobble). The two blades are connected in a "V" shape and move in and out as the hub is turned. This changes the shape of the V and the width of the cut.

The idea is that it will make a cleaner, flatter-bottomed cut than a standard adjustable dado. And it does. But it's not a great improvement. You still get a "scalloped" bottom at most widths (drawing below).

But this blade is available in an 8" size, so it's a bit more versatile than the 7" adjustable dado.

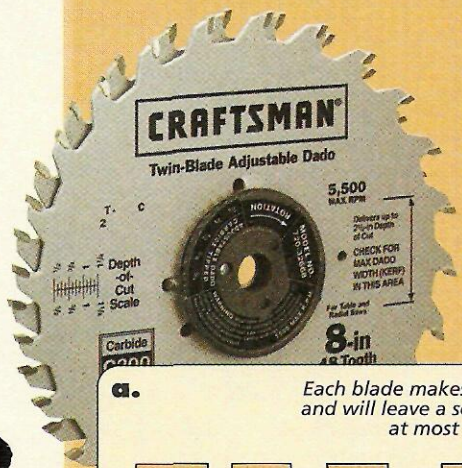

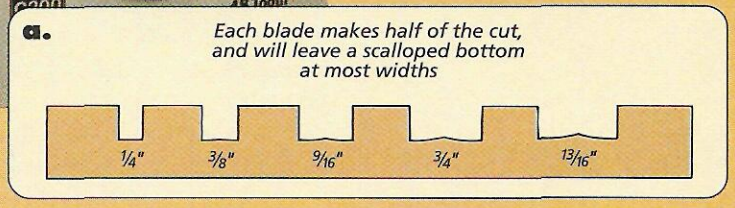

A good quality adjustable dado makes a slightly cleaner cut, but still chips in hard-to-handle oak plywood. And the wider the cut, the poorer the result.

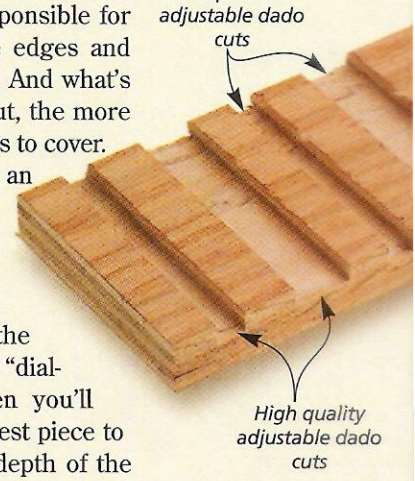

Stacking Dado

Adjustable dadoes are easy to use and are fine for an occasional task. But if you want a blade you can rely on to cut clean, accurate joinery day in and day out, a good quality stacking dado is a better choice.

CUTTERS AND CHIPPERS. The idea behind the stacking dado is pretty simple. There are two scoring blades that define the outside edges or shoulders of the cut, with a "stack" of chipper blades in between that clean out the waste (Fig. 3).

The cuts made by the scoring blades and chippers overlap to give you a flat-bottomed cut. The chippers come in different thicknesses (1/8", 1/16", and 1/4"). So by putting different combinations together, you can cut a variety of widths. Thin shims can be inserted between the blades to fine-tune the width.

CARBIDE SETS. All-steel stacking sets are still available, but today, carbide-toothed sets are the way to go. But they're not all the same. You can buy a carbide stacking set for as little as $20, and basically you'll get what you pay for. But then some of the more expensive sets sell for over $300, which is pretty steep. I'd settle somewhere in the middle. The *Freud* set shown in the photo on page 22 proved itself in my shop and retails for about $100.

Where you'll really see the difference between sets, is in the quality of the cut in hard-to-work materials like veneered plywoods. The less expensive blades will do a tolerable job in solid wood but they can't handle crosscuts in plywood without serious chipping, as you can see in the photo below.

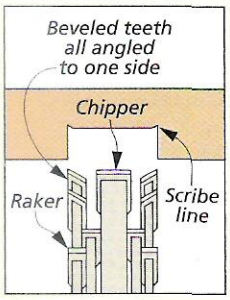

▲ *The scribe lines at the edges of the cut help prevent chipout as the blade exits the cut.*

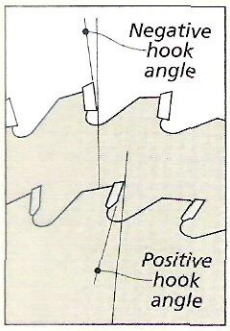

▲ *A tooth with a negative hook angle cuts less aggressively and leaves a cleaner shoulder.*

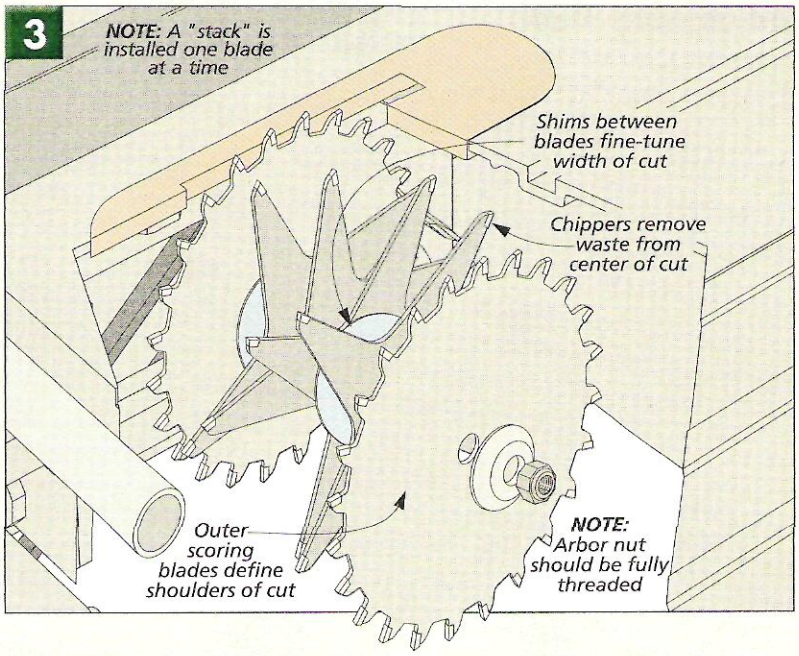

SCORING BLADES. The outer scoring blades account for a lot of the difference in quality between sets. These blades should cut clean (no chipout), square, and flat with an almost invisible "scribe line" at the edges of the cut (upper margin).

All scoring blades use a combination of beveled teeth and flat-topped rakers. The beveled teeth all angle to one side and the two blades are mirror images (a left and right), as shown in the upper margin.

The number of teeth on the scoring blades can vary quite a bit (as many as 42 to as few as 12), but this doesn't seem too important to the quality of cut. Since all the beveled teeth angle to one side, a 24-tooth scoring blade should cut as smooth a shoulder as a standard blade with twice as many teeth.

But I've found that the tooth feature that leads to a really clean, chip-free cut in all types of material is a *negative* hook angle. As you can see in the margin drawing, this tooth looks flatter and less aggressive.

What this translates to is a slower feed rate and a more upward cutting action. The blade I use in my shop has a negative hook angle, and I highly reccomend this feature. (It's great for crosscuts in plywood.)

CHIPPERS. The chippers are what create a smooth, flat bottom, so it follows that they all use a flat-ground tooth. The less expensive blades have two-tooth chippers, while the better ones have chippers with four or six teeth. But the really important thing about the chippers is that they're accurately sized so you end up with a flat bottom.

6" OR 8"? Stack sets come in 6" or 8" diameters. What you need is a blade that's at least 2" smaller than the capacity of your saw (an 8" blade for a 10" saw). The reason for this is fairly simple. The teeth of a smaller blade will be moving slower, but they'll have more cutting force (torque) behind them.

But even a 6" blade will still cut over 1" deep, so if you have a low-powered 10" saw, you might be better off with a 6" blade.

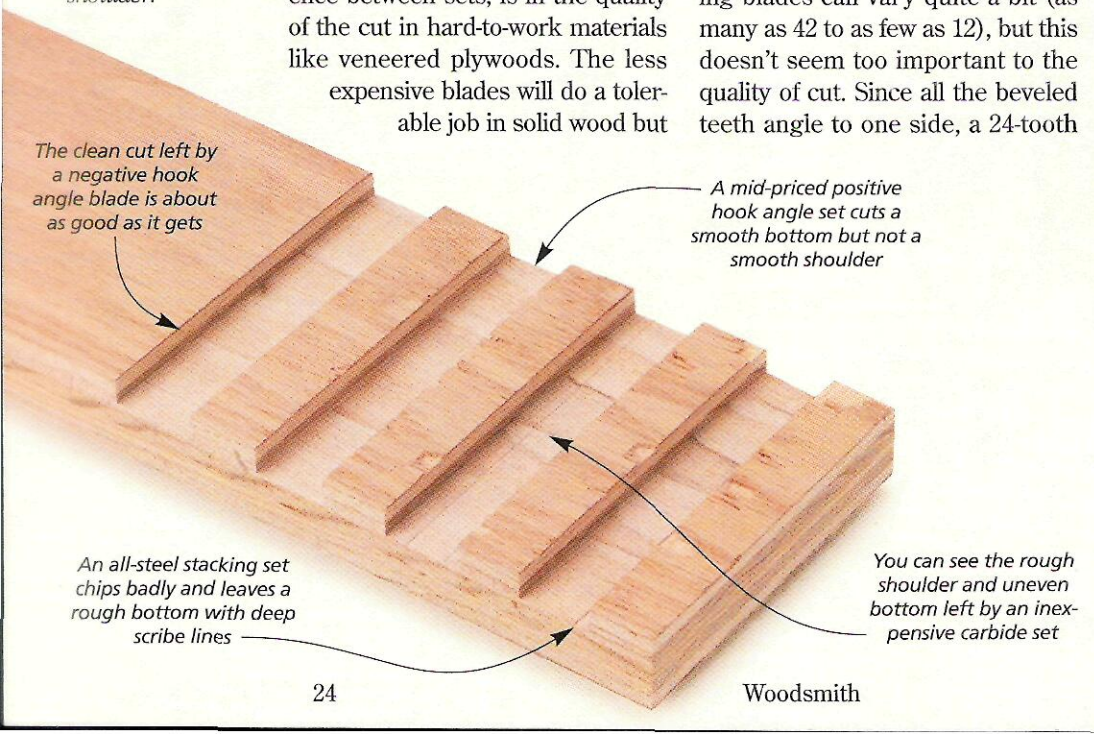

Setting Up

Before you make that first satisfying cut, you need to get set up, and there are just a few simple tricks to this.

ONTO THE SAW. A stack dado goes onto the saw one piece at a time. I've tried to put a "pre-built" stack on the saw, but I can say it doesn't work.

When you put the first scoring blade on the arbor, just make sure you've got the correct blade (left or right) with the teeth pointing in the right direction (Fig. 3).

Next comes a chipper. But before you add it to the stack, make sure it's clean. You don't want any sawdust "shimming" the stack. The important thing when setting a chipper is to place the teeth in the gullets of the scoring blade (Fig. 4).

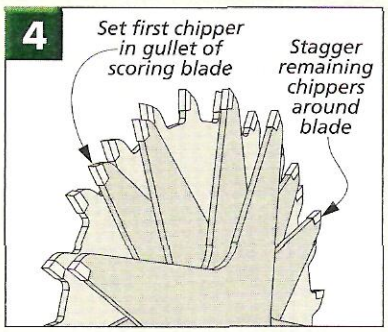

Now as more chippers are added, they should be staggered to balance the blade, as in Fig. 4. Then after the outer scoring blade is added, I make sure that nothing shifts when I tighten down the arbor nut.

After the dado insert is installed, just give the blade a turn to make sure it spins free. A test cut will tell you if the setup is accurate.

SIZING THE BLADE. The stack set I use came with four 1/8" and two 1/16" chippers, but the number and sizes vary with different sets. Some manufacturers have caught on to the problem of undersized plywood and are now including a 3/32" chipper.

Once you know how to set up your blade, getting the right size stack is just a matter of arithmetic. With different combinations of the scoring blades (never use just one scoring blade) and chippers, you can cut from 1/4" to about 13/16" wide. This maximum width is pretty standard, since most arbors won't hold a wider stack. (Safety Note: The nut should always be fully threaded.)

SHIMMING. I've found that even the more expensive stack sets usually need to be shimmed to get even standard widths like 1/2" or 3/4".

Shimming can be a trial and error process. But as you get to know your blade better, it gets easier. Shims are made from a lot of different materials, and a good set has different thicknesses (5, 10, 15, and 20 thousandths). I like to use the magnetic type, since you can stick them right to a blade. The thing to remember about shimming is to spread them out across the stack so you don't create a gap (see margin).

A GOOD CUT. The final ingredient for a clean, accurate cut is the right technique. And this is pretty simple.

First, I always make a test cut to check the setup. And then I sneak up on the cut with slow, shallow passes — never more than about 1/4" at a time. When you're cutting cross-grain in "chippy" material, take an initial light scoring pass.

If chipout at the end of the cut is going to be problem, back up the workpiece with a scrap.

And finally, since you often can't see the blade, always be aware of where it's going to exit the cut. W

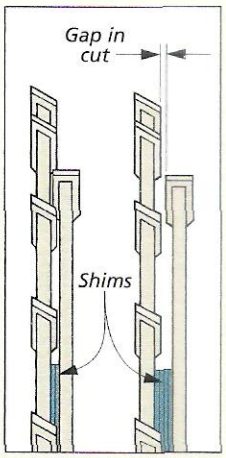

▲ *Too many shims at one spot (right) will result in a gap in the cut.*

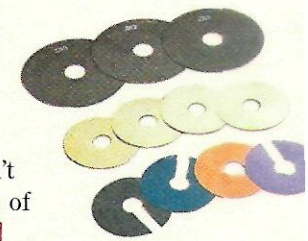

▲ *Shims can be magnetic (top) brass (middle), plastic (bottom), or even paper.*

ZERO-CLEARANCE INSERT

An "accessory" dado insert for your table saw won't cost you much ($15 to $20). But a shop-made zero clearance insert can give you a cleaner cut, and it's also safer when you're working with narrow pieces.

Start with a piece of wood (plywood works great) that's the same thickness as your insert (usually about 1/2"). Then you can just use the insert as a pattern to make a new insert blank (Fig. 1).

Now the next steps take a little care. With the dado blade lowered beneath the table and the blank in place, position the fence over the side of the insert (Fig. 2). Just make sure it's not over the blade. Next tighten down the insert with a couple of thin shims between the fence and the blank. On some saws the back of the fence might need to be clamped (Fig. 2a).

▲ *A zero-clearance insert can make your dado blade a little more user-friendly.*

When everything is in place, turn on the saw and slowly raise the blade through the insert (Fig. 2). Adding a finger hole to the insert makes it easier to remove.

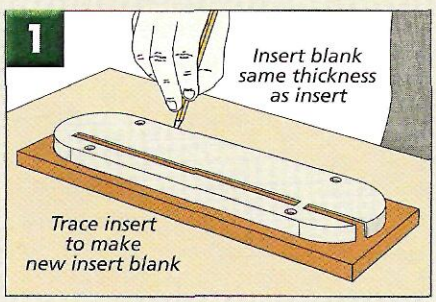

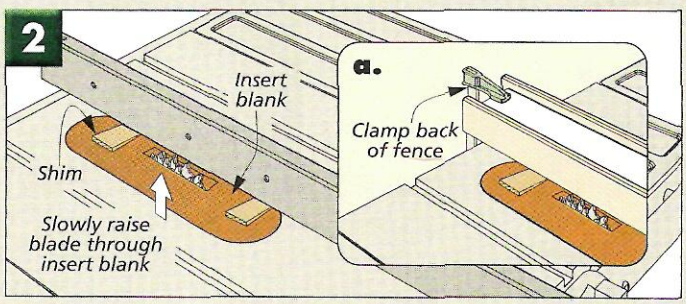

Woodsmith GO ON-LINE EXTRAS

Learn more about making a zero-clearance insert for a dado blade on our web site: Woodsmith.com

SHOP-MADE BEADED PANELS

Try your hand at these easy-to-make panels using a simple router table technique.

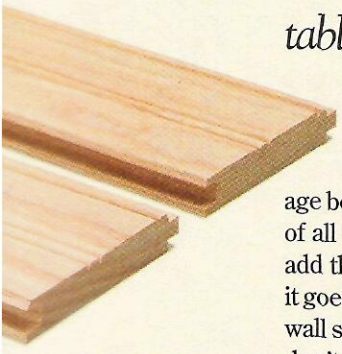

▲ *Beaded panels can be added to almost any project — large or small. Like the storage bench and wall shelf in this issue.*

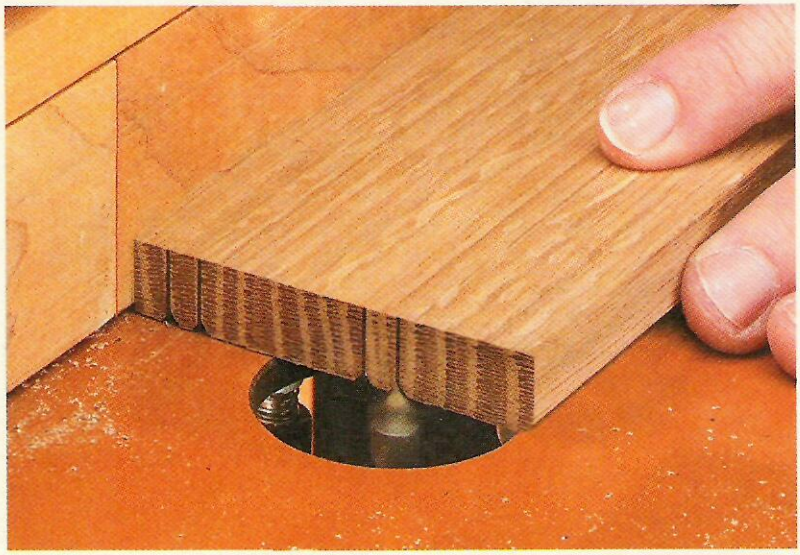

Making the beaded panels for the storage bench (page 28) got me thinking of all the other projects that I could add this great-looking detail to. And it goes with almost any style (like the wall shelf on page 18). So even if you don't plan on building the storage bench or the wall shelf, you'll still want to give this technique a try.

Aside from looks, you may want to make your own beaded boards because pre-made panels aren't available in most wood species. Best of all, the whole process can be done on your router table.

SETUP. Now routing the beaded panels isn't all that hard to do. They're just narrow boards with a series of grooves routed in one face, plus a tongue cut on one edge and a groove in the other. But it pays to be organized. After all, you'll be making a lot of boards (46 for the storage bench). So I found it's best to make them in an assembly line fashion. This way you'll run all the boards through the router at one setting before moving on to the next cut. (I set a table near my router table to keep the stacks organized.)

I began by cutting panel blanks to final length and width. It's a good idea to make extra panel blanks for test cuts and to have a few extra so you can match color and grain for the best look. (For the bench, I made a half dozen more.)

Now pick up the first board and lay out the grooves on one end. You'll use it to set the router fence for each set of cuts, as in Fig. 1a.

THE BIT. The bit I used is called a "point-cut round-over bit," as in the lower margin photo. Think of it as a fancy V-groove bit. And by routing two grooves side-by-side, you can get a nice bead pattern. The bit comes in two sizes, a 1/8" radius and a 3/16" radius. For our projects we used the larger bit. (Turn to page 35 to find out where you can get it.)

At this point you're ready to start routing. One thing you'll notice when you start routing the first

▲ *A point-cut round-over bit makes it easy to create your own beaded board on your router table.*

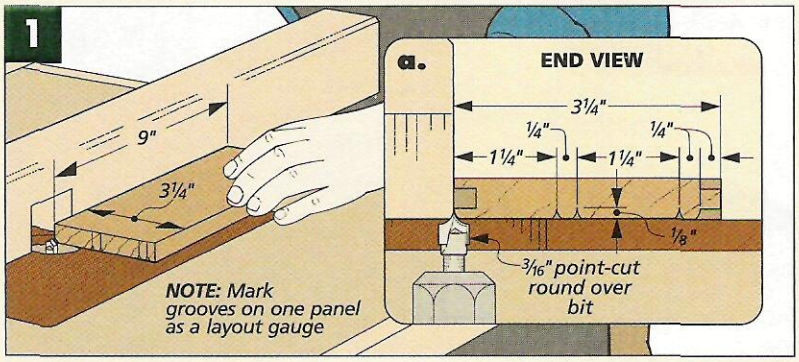

▲ *After routing the beads, you can clean up the grooves with some sandpaper wrapped around a pointed sanding block.*

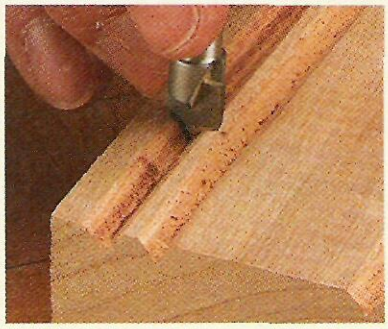

▲ *To remove burned areas, use the bit to scrape along one side of the groove, then flip the board and scrape the other side.*

groove is that it doesn't feel like anything is happening. That's because the bit isn't removing a lot of material. If you flip the piece over don't be surpirsed if you see what looks like lint in the bottom of the groove.

The reason for this is that the tip of the bit isn't really cutting (it's just spinning). You can clean out the fuzz by making a couple of quick passes over the bit. And for final smoothing, I made a pointed sanding block, as in the lower left photo on page 26. There's one more thing to keep in mind. Some woods, like cherry, tend to burn. To see an easy way to remove burn marks, take a look at the lower right photo.

Once a groove had been routed on every board, I grabbed my setup board and reset the fence for the next cut. After routing a few more boards, I noticed the bit wasn't cutting as well as it used to. The problem is a build up of pitch on the bit that causes it to run hotter and cut slower. But you can take care of it with a quick spray of bit cleaner.

That's really all there is to routing the beads. But there are still a couple of other things to do before the boards are ready to be installed.

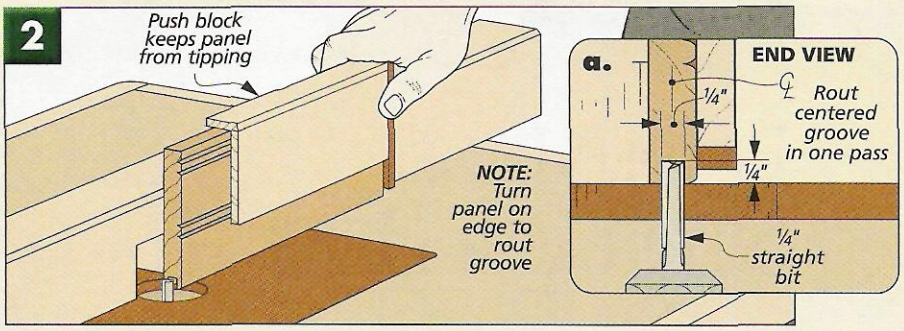

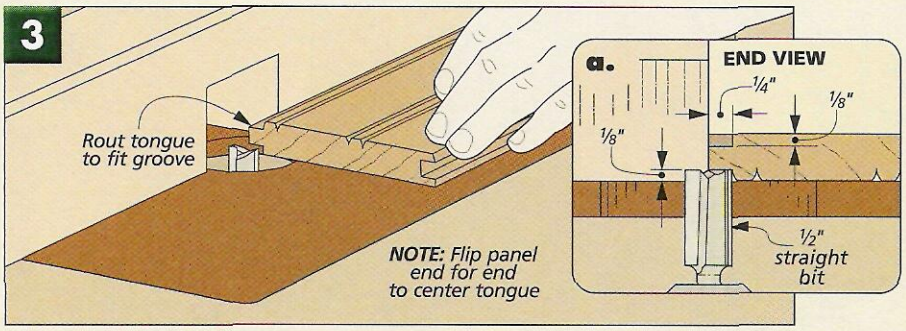

TONGUE AND GROOVE. With the beads cut, the tongues and grooves can now be routed. To cut these grooves safely, I made a push block with a cleat on the end, as in Fig. 2. Then a 1/4"-deep, centered groove can be routed on each board, as shown in Fig. 2a. Since you can't sneak up on the width of the groove (1/4"), you'll want to take the time to make sure the bit is centered by using some test pieces. Finally, all that's left to do is cut a tongue to fit the groove, as in Figs. 3 and 3a. W

RABBET LAP

Although the beaded panels look great just the way they are, there is one more step you can take that will make them look even better.

To see what I'm talking about, take a look at the photos at right. In the top photo, the beading drops behind the rail. This doesn't provide a clean, crisp look. But if you look at the lower photo you can see how a simple rabbet allows the beading to end on top of the rail of the project.

It's no problem to rout the rabbet in one pass using the fence as a stop. All it takes is a 3/4" straight bit. And to avoid chipout, I used a piece of scrap to back up the cut. What you're looking for here is to cut the rabbets slightly deeper than the beads (1/8"), as shown below. The width of the rabbet will match the width of the rabbet in the rails (about 1/2" on the bench), as you can see in detail 'a' below.

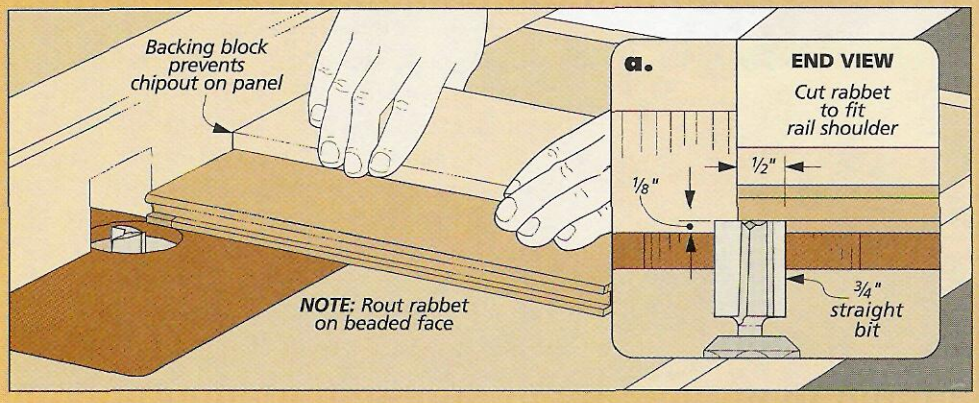

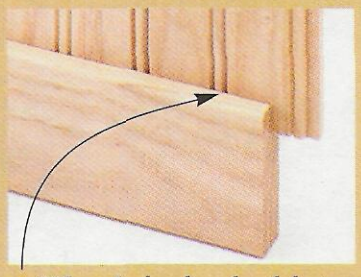

When the beading detail drops behind the rails, it creates dark shadows and a "fuzzy" joint.

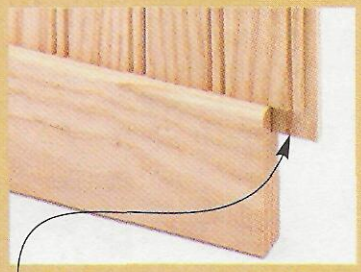

Adding a rabbet to the ends of the panels makes a crisp joint line and a more finished look.

Beaded-Panel Storage Bench

Here's a bench with lots of style — and lots of storage. But don't overlook all the woodworking that goes into it.

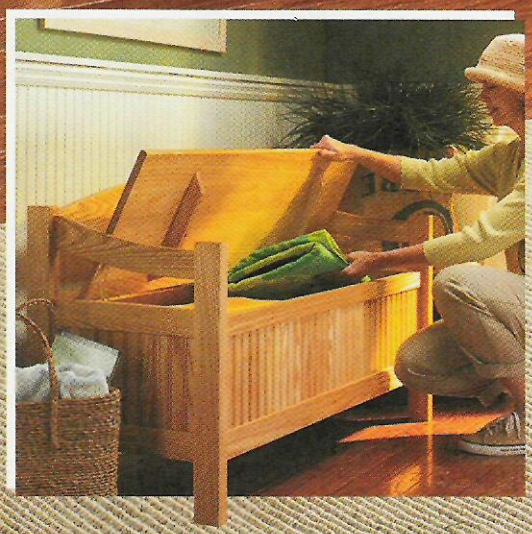

Under the seat of this bench, you'll find a deep well that provides plenty of useful storage space.

Here's one of those projects that has it all: a fresh, clean look, lots of storage, and some interesting challenges. All this in a project that's not all that complicated — just a mortise and tenon frame with some beaded panels.

It's the mortise and tenon joints that provide a lot of the interest. There are a couple different "variations" — each with its own solution. Nothing you'll find difficult. There's just enough here to keep you on your toes.

Of course the paneling isn't your run-of-the-mill detail either. I built this bench out of ash, so I made my own beaded boards, as described on page 26. But if you use oak or pine (or decide to paint the panels, as on page 34), then you'll be able to use pre-made beaded boards.

Construction Details

OVERALL DIMENSIONS:
51"W x 28½"H x 20"D

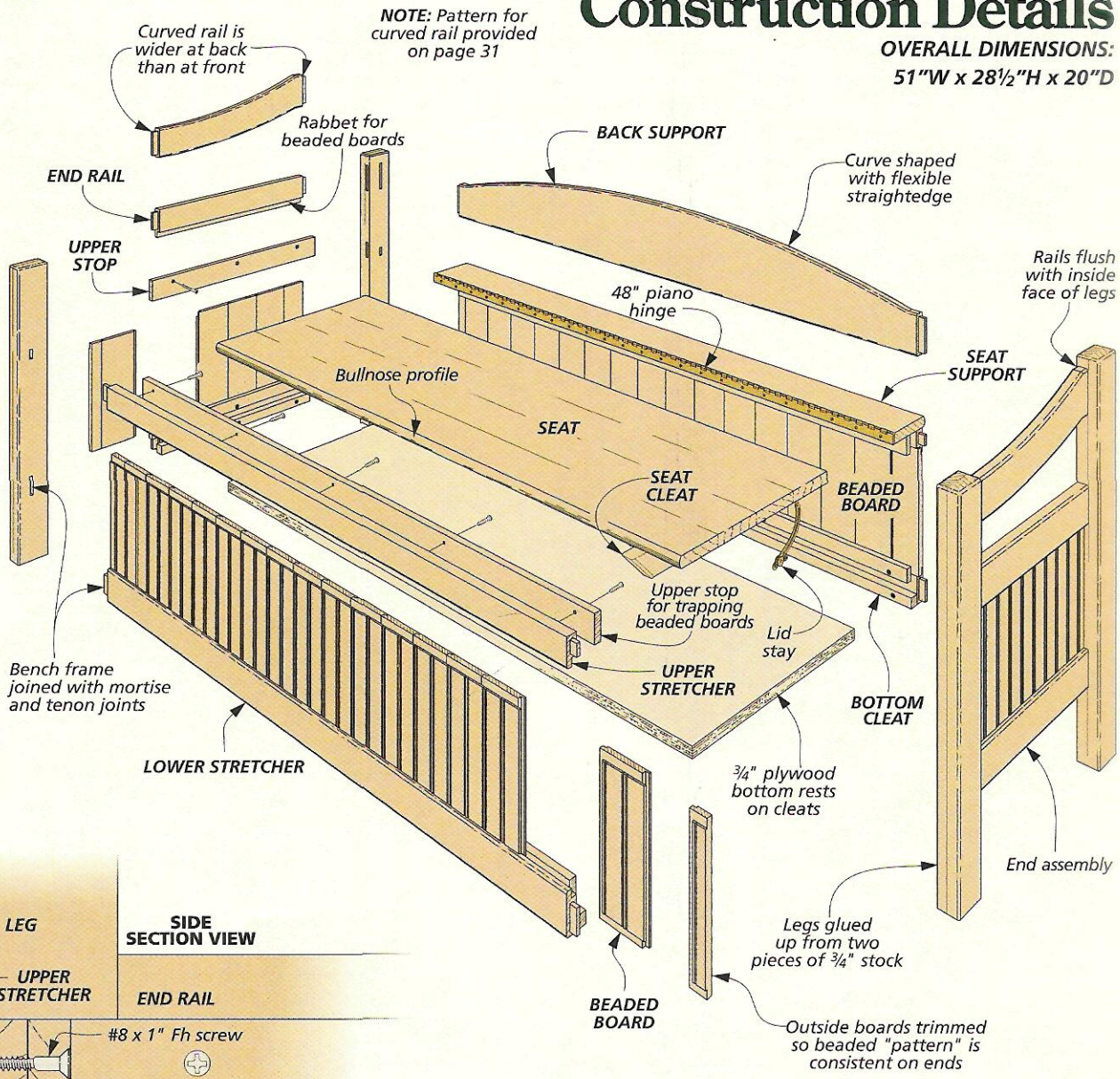

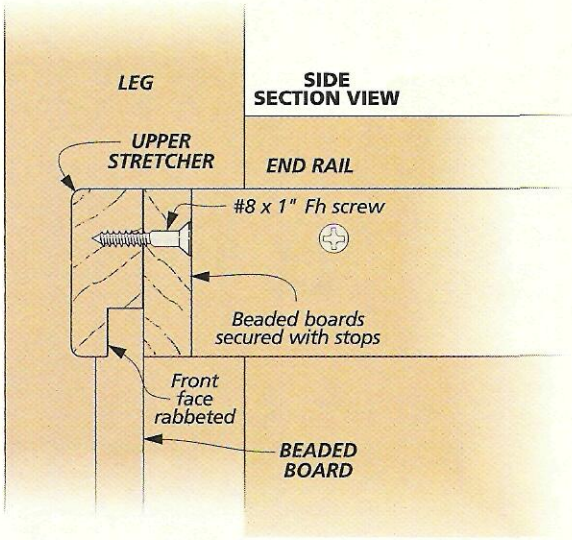

NOTE:
Bench built with ¾" and ½"-thick ash (and a quarter-sheet of ¾" plywood)

Woodsmith GO ON-LINE EXTRAS — To download a free Cutting Diagram for this project, go to: www.Woodsmith.com

MATERIALS & SUPPLIES

A	Front Legs (2)	1½ x 2½ - 23¾	**H**	Bottom Cleats	¾ x ¾ - 130 In. in.	**L**	Lower Stops	½ x 1 - 130 In. in.
B	Back Legs (2)	1½ x 2½ - 26¼	**I**	Bottom (1)	¾ ply. - 17 x 48	**M**	Seat Support (1)	¾ x 4 - 48
C	End Rails (4)	¾ x 2½ - 17	**J**	Beaded Boards (46)	½ x 3¼ - 9	**N**	Seat (1)	¾ x 15 1/16 - 47 7/8
D	Curved End Rails (2)	¾ x 5 - 17	**K**	Upper Stops	½ x 1¾ - 130 In. in.	**O**	Seat Cleats (2)	¾ x 1½ - 12
E	Upper Stretchers (2)	¾ x 1¾ - 50					
F	Lower Stretchers (2)	¾ x 2½ - 50		• (1) 48" Brass Piano Hinge w/Screws			• (46) #8 x 1" Fh Woodscrews
G	Back Support (1)	¾ x 6 - 50		• (2) Lid Stays (Left & Right) w/Screws			• (6) #8 x 2" Fh Woodscrews

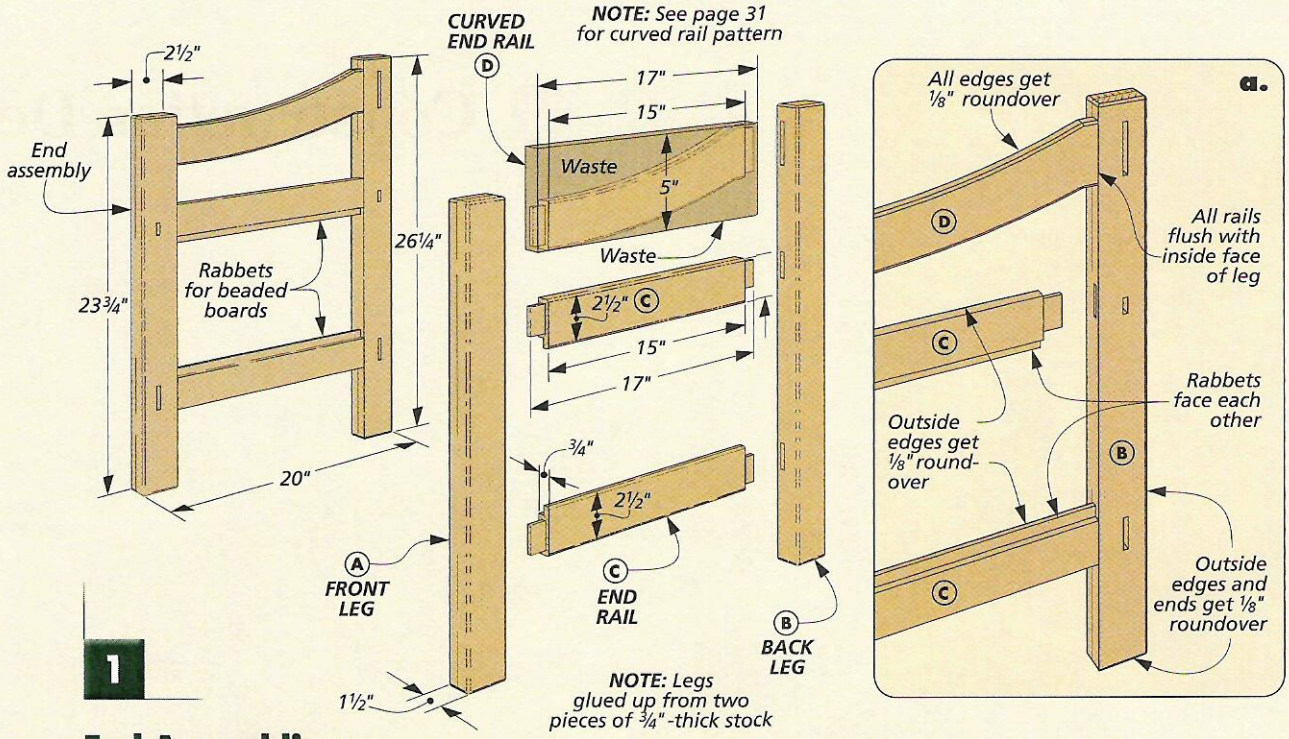

1

End Assemblies

quick look at the exploded view above, and you can see how the frame of this bench is built — with mortise and tenon joinery. But take a closer look, and you'll find that these aren't your "standard" mortises and tenons. The mortises aren't centered on the thickness of the legs, and the tenons aren't centered top to bottom either.

This makes the joinery a bit more interesting — without being much more difficult. All it takes is a careful layout and a little hand fitting (which I'll describe in detail later).

LEGS. By now, you've probably noticed that the legs for this bench are 1½" thick, but each leg starts out as two pieces of ¾"-thick stock that are laminated together. (Yellow glue works just fine for this.)

When the *front legs (A)* and *back legs (B)* have been glued together and cut to size, you can begin work on the mortises. As you can see in Fig. 1a, they're laid out so the connecting rails will be flush with the inside face of the leg.

While you're laying out the mortises, keep in mind that they aren't in exactly the same position. You're actually creating two mirrored pairs of legs, as in Fig. 2a. I should also point out that the mortises for the curved rail aren't the same size. The ones on the back legs are ½" longer, as indicated in Fig. 2b.

Once you have the mortises carefully laid out, there's nothing unique about cutting them. As you can see in Fig. 3, I drilled overlapping holes with a Forstner bit and then followed up with a chisel to clean the cheeks and square up the ends.

The last thing to do to the legs is rout or sand a ⅛" roundover on both ends and the three outside edges, as in Fig. 2a. (The inside corner is the one closest to the mortises.)

2

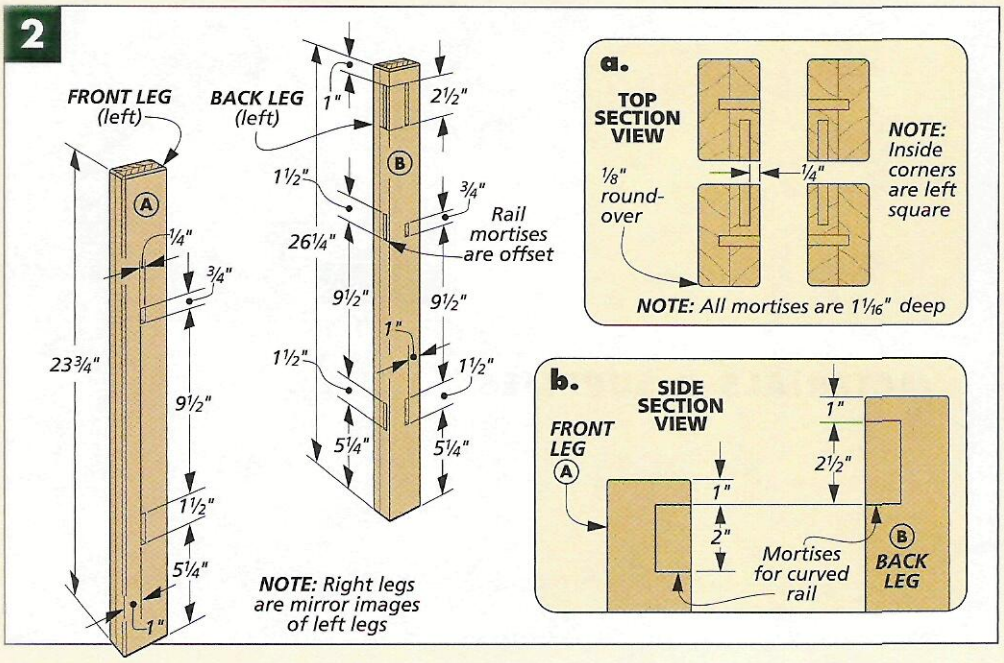

3

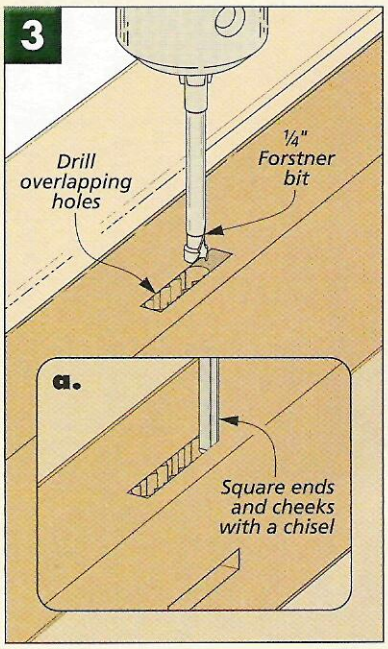

RAILS. Now the four *end rails (C)* and two *curved end rails (D)* can be cut to size from ¾"-thick stock, as in Fig. 1. They're all cut to the same length (17"), but the blanks for the curved rails are quite a bit wider.

To cut the tenons on the rails (C), I used a dado blade, as in Fig. 4. Sneak up on the height of the blade until the thickness of the tenons matches the mortises. Then after cutting one shoulder at ¼" (Fig. 4a), flip the rail over to cut the other shoulder (Fig. 4b). Sneak up on the height of the blade until the tenon fits its mortise, as shown in Fig. 4b.

Before cutting the tenons on the curved rails, I photocopied the pattern below at 250% and traced it onto the two blanks, as in Fig. 5. Then after the two cheeks were cut, the two *outside* (opposite) shoulders can be cut using the setup shown in Fig. 4a. The inside shoulders will be cut with a hand saw, as shown in the margin photo. But first, I cut the rails to shape (Fig. 6).

After the tenons are complete on the curved rails, there are still two things to do before the ends can be assembled. First, I cut a rabbet on the edge of the rails (C) that have the taller shoulder, as in Fig. 7. (This will become the inside edge that holds the beaded boards.)

Finally, the edges of the rails need to be rounded over, as indicated in Fig. 1a. I rounded over all four edges of the curved rails but only the outside two edges of the straight rails.

ASSEMBLY. At this point, the legs and rails can be glued together. The straight end rails should fit without any trouble — just make sure the rabbets face each other, as shown in Fig. 1a. But when it comes to the curved rails, don't be surprised if you need to fine-tune the top and bottom shoulders of the tenons to get them to line up with their mortises in the legs. Finally, make sure your end assemblies are mirrored. (You don't want to end up with two left or two right assemblies.)

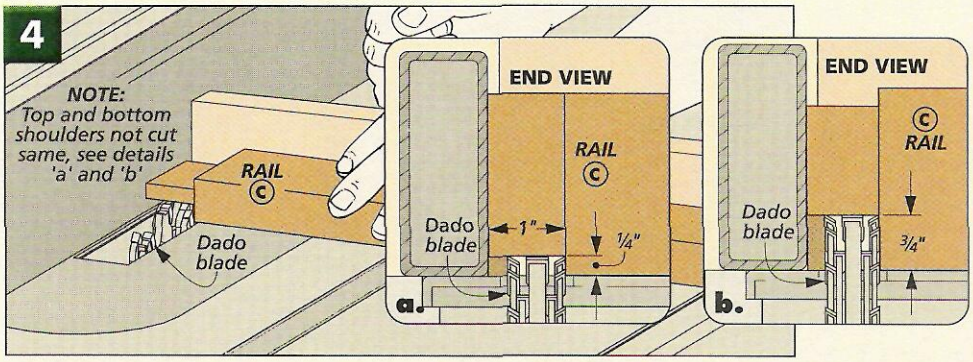

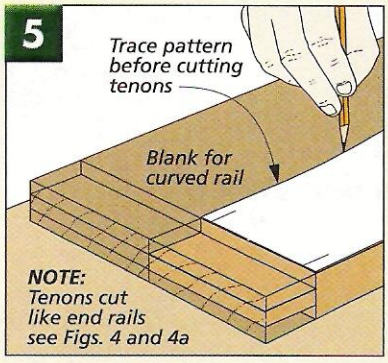

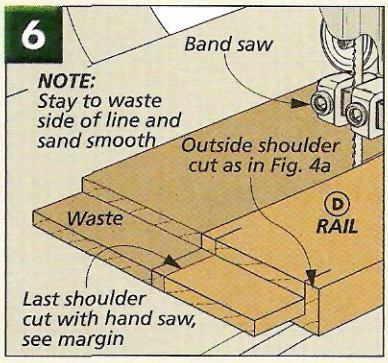

▲ *To create the last shoulders on the curved rails, I used a hand saw and a chisel. To see how, turn to page 15.*

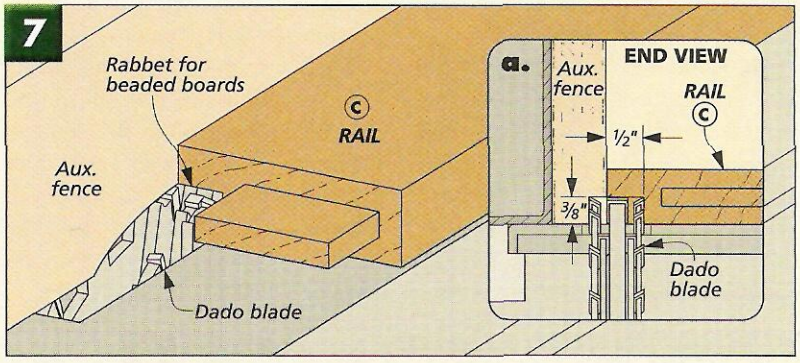

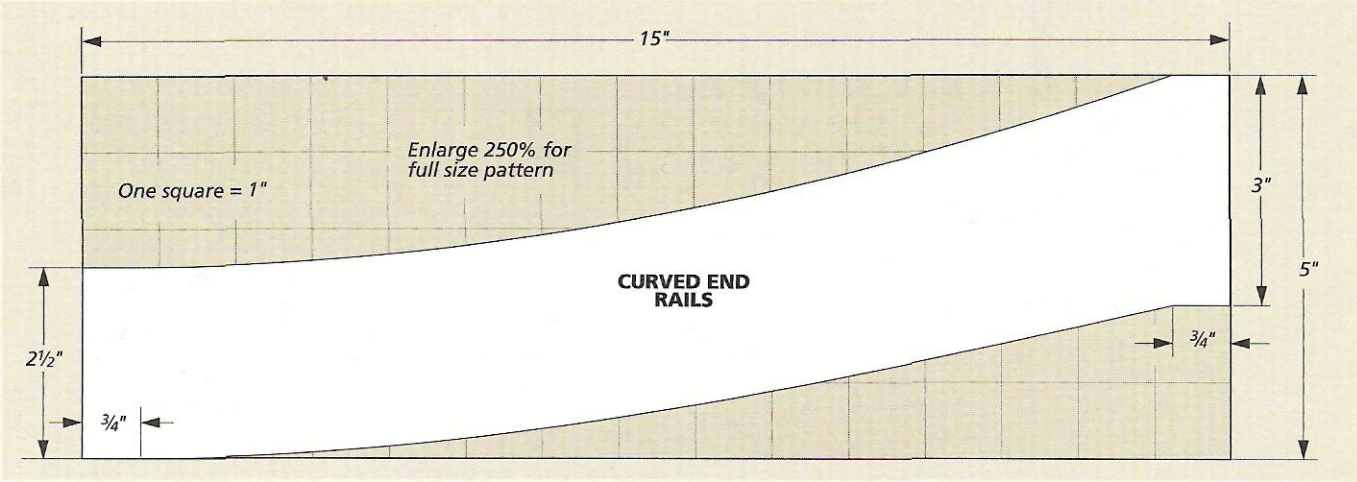

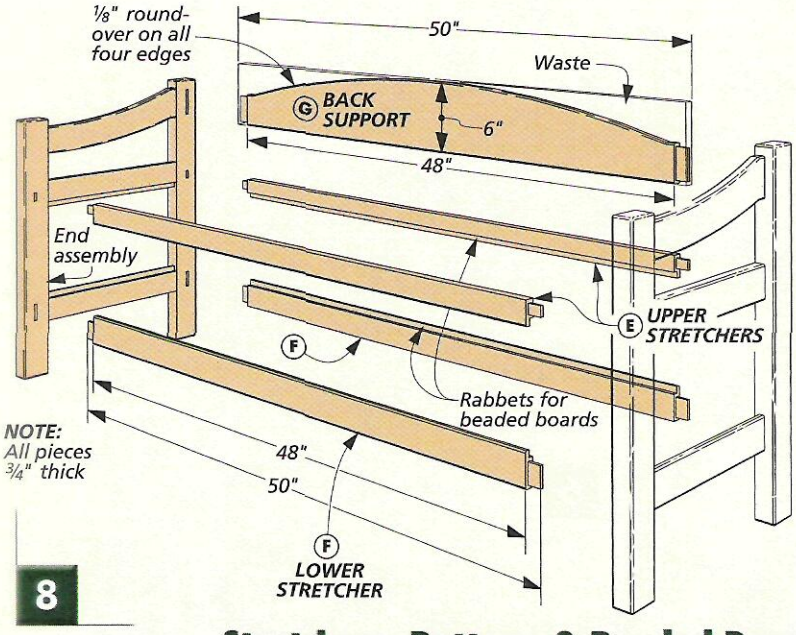

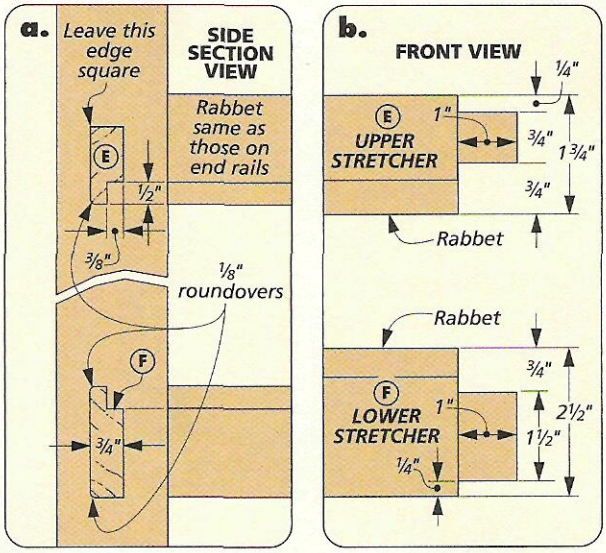

Stretchers, Bottom, & Beaded Panels

ow that the end assemblies are complete, the next step is to connect them with stretchers and a back support, as shown in Fig. 8. There really isn't much that's new here. These pieces are longer than the end rails, but the joinery is almost identical.

STRETCHERS & BACK SUPPORT. Like the rails earlier, the *upper (E)* and *lower stretchers (F)* and *back support (G)* are cut to the same length (50"), but the upper and lower stretchers are different widths, as in Figs. 8 and 8b.

The first thing to do is cut the tenons on the ends of the stretchers. The procedure for this is the same as before. (Refer to Fig. 4 on page 31.) But note that since the pieces aren't the same widths, the tenons you cut won't end up the same either. Still, this shouldn't affect the procedure (or your setups).

While cutting the tenons on the stretchers, you can go ahead and cut the cheeks and bottom shoulders of the tenons on the back support. But like the curved rails, you'll want to cut the upper shoulder after the curve has been cut, as in Fig. 10. (Again, I used a hand saw for this.)

The curve on the back is just a simple arc. I laid it out using a piece of 1/8" hardboard, as you can see in Fig. 9. To hold the hardboard in position, I taped small, pointed blocks to the blank with carpet tape (one at the center and one at each end). But note that the curve does not stretch from shoulder to shoulder — there's a 3/4" flat spot at each end, as shown in Fig. 9a.

When shaping the back support, I cut the flat spots first and then worked on the curve, as in Fig. 10. This way, it'll be easier to get a crisp

WELL-DEFINED SHOULDERS

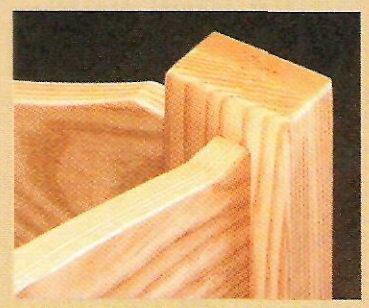

▲ *The curve here stops just before the leg. Getting a crisp shoulder line requires careful attention.*

When a gentle curve meets a straight section, like the curve on the back support, you have to take care to keep the shoulder line crisp and square to the piece.

To keep a clean shoulder line when smoothing out this curve, it works well to use a file perpendicular to the face of the piece (left drawing). Then a simple sanding stick works well to remove the file marks (right drawing).

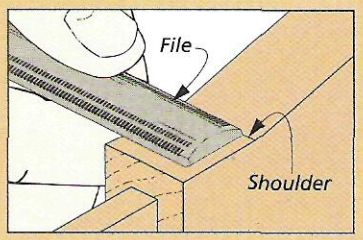

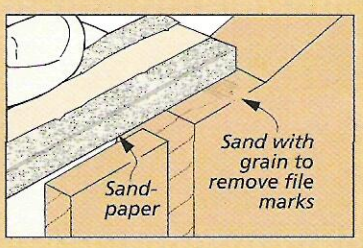

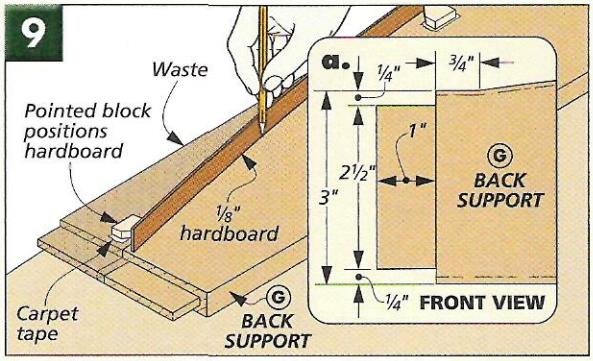

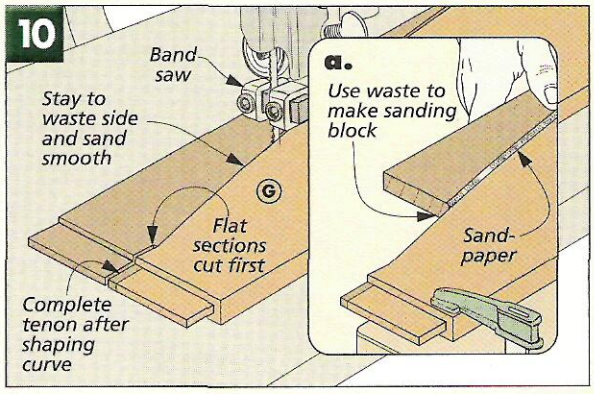

shoulder line where the curve ends. But you'll still want to take care when cleaning up this area, as described in the box on page 32. As for the rest of the curve, I like to use part of the waste by attaching a piece of adhesive-backed sandpaper to it, as in Fig. 10a.

Now all that's left is to cut the rabbets on the inside edges of the stretchers and rout the roundovers, as noted in Figs. 8 and 8a. Then the end assemblies, stretchers, and back support can be glued together.

BOTTOM & CLEATS. Once the bench frame is assembled, it's time to add a bottom for the storage compartment, as in Fig. 11. Here, with all the rails flush with the inside of the legs, all you need to do is screw some ¾"-square *bottom cleats (H)* flush with the lower rails and stretchers, as shown in Fig. 11a. Then cut a panel to match the opening.

I cut the *bottom (I)* from a piece of ¾" plywood, as in Fig. 11. And since the panel will be hidden inside the bench, it doesn't have to match the wood of the rest of the project. I simply set the panel in place. There isn't any need to secure it because it will be trapped by the stops for the beaded boards that are added next.

BEADED BOARDS. At this point, you're ready to add the *beaded boards (J)* to the bench frame, as shown in Figs. 12 and 13. Beaded boards are a great way to create a wide panel without having to glue up a lot of boards — plus they're distinctive looking. And everything you need to know about making them can be found in the article on page 26.

To install the beaded boards, I decided to trap them in the frames with *upper (K)* and *lower stops (L)*. These ½"-thick pieces are simply screwed in place, as you can see in Fig. 13a. But there's more to adding the beaded boards than this.

The trick is getting the two outside pieces to look right (Fig. 12). You want the fields to be roughly the same on each end, but as you can see in Fig. 12a, the outside pieces won't necessarily be the same width for this to happen, and you may have to experiment a bit. Also, the bead boards shouldn't fit tight between the legs. I left about ¼" over the panel's entire length so the pieces can expand freely.

When the two outside pieces were trimmed, I decided to glue them against the legs. This way, they can't shift away from the legs and create gaps. (The other pieces will just "float" in the rabbet.) To add the rest of the beaded boards, start at the ends and work towards the center. With the last piece, you'll have to "tip" the panels up slightly to get the tongues and grooves to interlock.

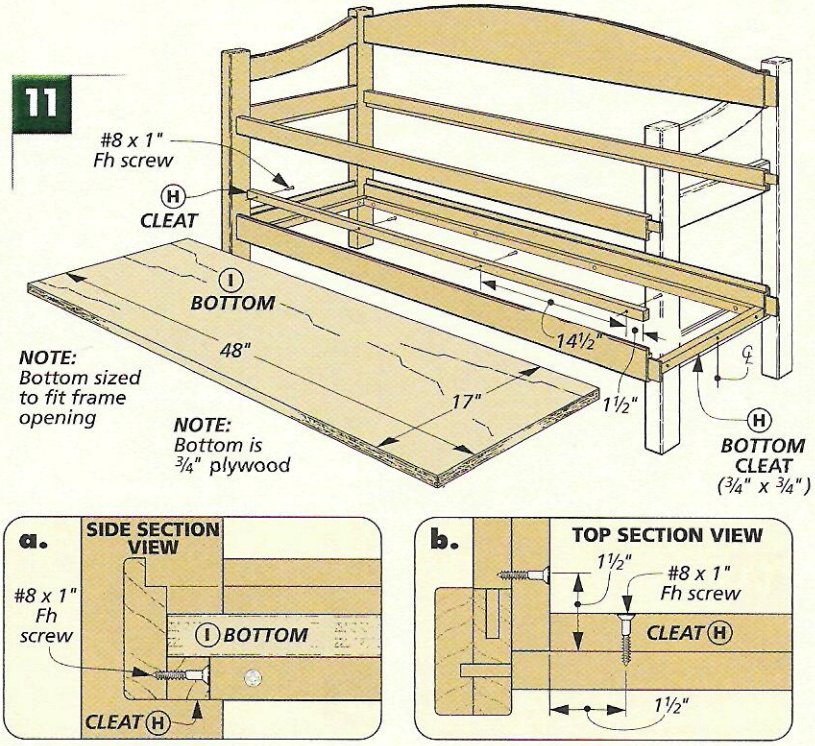

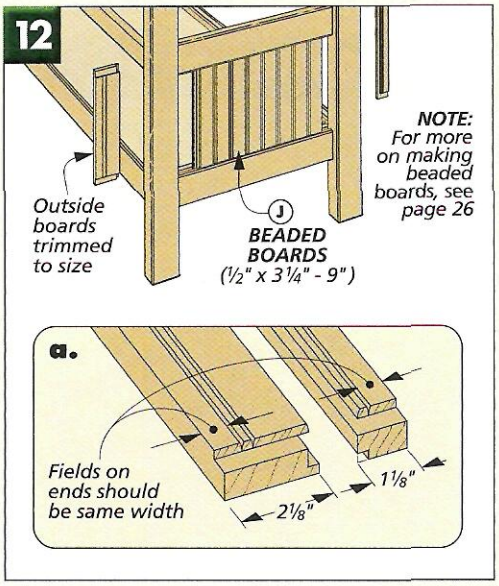

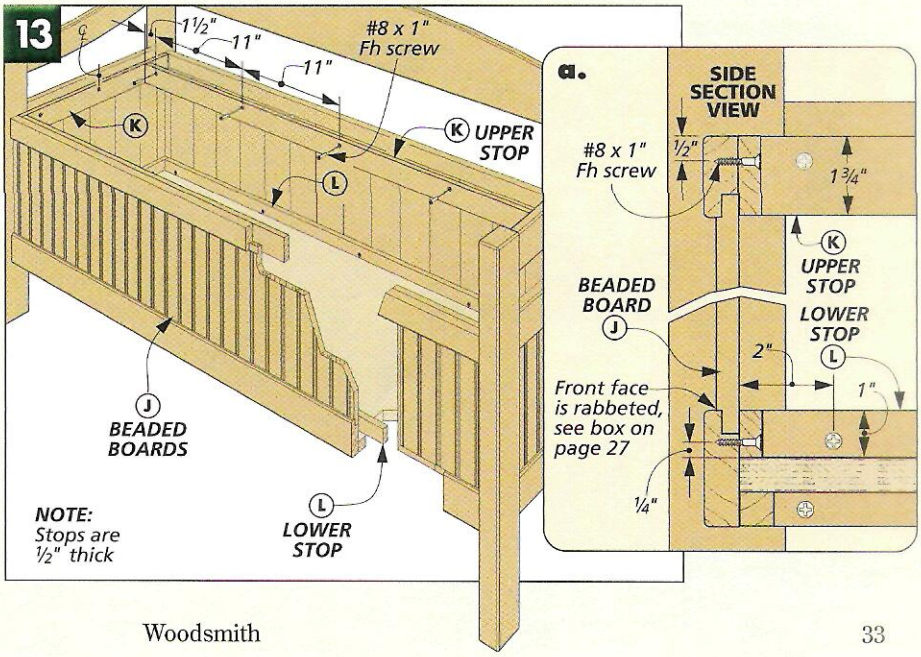

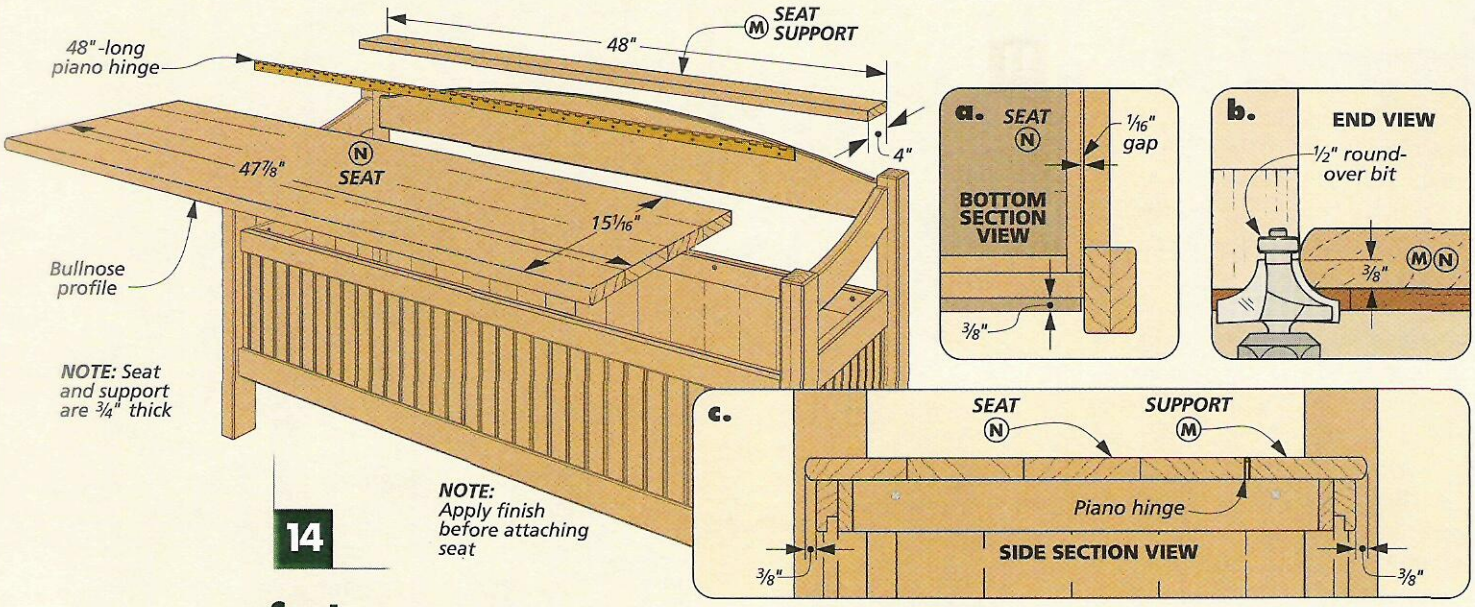

14

Seat

The last part of this bench to add is the seat, as shown in Fig. 14. First a seat support is added to the bench. Then the seat is attached to the support with a piano hinge. A couple cleats help keep this wide panel from warping. And two lid stays prevent it from slamming shut.

SEAT SUPPORT. The *seat support (M)* is just a 4"-wide piece that's cut to fit tight between the back legs and then glued to the back, as in Fig. 14c. But first, you'll want to rout a bullnose along the back edge. I did this at the router table with a ½" round-over bit raised ⅜", using the fence to guide the workpiece, as shown in Fig. 14b.

SEAT. When the support is glued in place, you can glue up a panel for the *seat (N)*. With this piece, you'll want to allow for a 1⁄16" gap at each end so the panel won't rub on the legs as it's opened and closed, as in Fig. 14a.

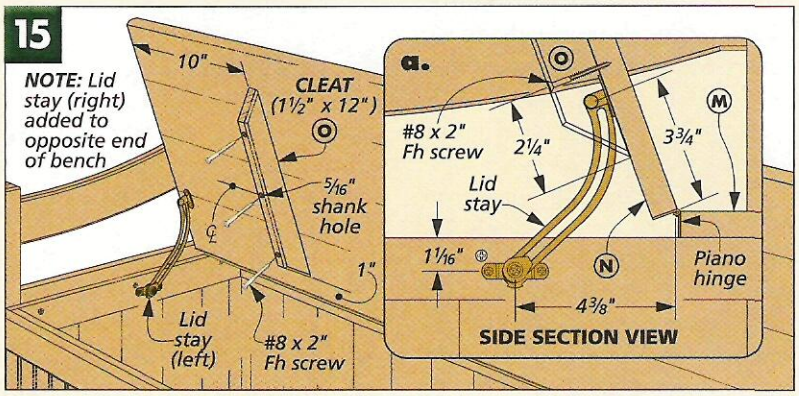

15

Then after routing the bullnose on the front edge, you can add two *cleats (O)* to the bottom of the seat, as in Fig. 15. I mitered the ends to remove the sharp points. And when attaching them to the lid, you'll want to use oversize shank holes so the panel will still be able to expand and contract.

Before the seat is attached to the bench, you'll want to apply the finish. (I brushed on several coats of a clear top coat.) Then you can add a couple lid stays to support the panel. (For sources, see page 35.)

PRE-MADE BEADED BOARDS

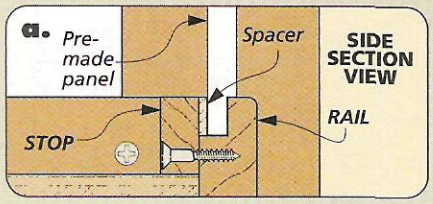

For a different look, you may want to paint the beaded panels (or the entire bench). If so, check your local home center or lumberyard for manufactured beaded board that's pre-primed or painted white. It will probably be MDF instead of solid wood, and it may have lap joints instead of tongue and groove, as in the right photo.

To fit the panels into place, I still rabbeted the face of the panels so the beads end in the rail. To see how I did this, check out the box on page 27. However if the panels are less than ½" thick, you'll need to add a spacer between the board and the stop, as in detail 'a' at left.

One last thing. If the color that you are painting the panels is some thing other than white, it's a good idea to paint the beaded boards before installing them. That way you won't have "unpainted" white patches appear as the boards expand and contract seasonally.

SOURCES

Cherry Console

Building the cherry console won't set you back much for hardware and supplies. The only items you'll need are a couple of knobs, a package of plastic stem bumper glides, and a few shelf-support pins.

I ordered a pair of 1¼"-dia. bronzed "ring" knobs (02W11.12) from *Lee Valley* for the drawers, but you might be able to find some locally. The plastic stem bumper glides (#28373) and the ¼" brass shelf-support pins (#30437) were both ordered from *Rockler*.

KREG JIG. If you'd like to try pocket hole joinery on the face frame, I'd recommend a *Kreg Jig*. The *Rocket*

Jig that I used is pretty inexpensive. It can be purchased from several of the sources listed at right. Or visit the *Kreg Tool* web site.

Cherry Stain

The *Jel'd Stain* and the *Zar* cherry stain used to make *Woodsmith's* cherry stain are available at many paint, hardware, and home improvement stores.

If you can't find a local retailer, you can call the phone numbers listed or check the web sites for dealer information.

Storage Bench

The storage bench just takes a couple of common hardware items. I ordered

a 48" long brass piano hinge (#19374) and a pair (left and right) of curved friction lid supports (#25619 & #25627) from *Rockler*, but you might find both these items available locally.

ROUTER BIT. You'll also need a special router bit to make the beaded paneling. A standard type beading bit will only cut a bead along the edge of a board. So I

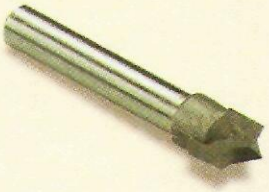

had to order the 3/16" point cutting round-over bit (#6431) shown in the photo above from *MLCS*.

BEADED BOARD. I built the storage bench from ash and couldn't find any pre-made bead board to match. But if you use another wood for the bench (oak or pine) this might not be a problem.

And if you'd like to try the painted paneling option, just visit your local home improvement or lumber store to see what's available. I found both individual primed MDF "beaded boards" and sheets of ¼" beaded paneling.

Craftsman Wall Shelf

Besides wood screws, the only hardware you'll need for the Craftsman wall shelf is a set of shelf hangers. I ordered two sets of interlocking "extra-thin flush mounts" (#29975) from

Rockler, and they really worked out well.

Online Extras

If you don't have internet access, you can have a copy of the Online Extras and the cutting diagrams mailed to you. Just specify which articles and cutting diagrams you'd like to receive and send a self-addressed, stamped #10 envelope to:

Woodsmith No. 146
Online Extras
P. O. Box 842
Des Moines, IA 50304

MAIL ORDER SOURCES

Similar project supplies may be ordered from the following companies:

Rockler
800-279-4441
rockler.com
Kreg Pocket Hole Jigs, Piano Hinges, Lid Supports, Shelf Hangers, Shelf-Support Pins, Stem Bumper Glides

Woodsmith Store
800-835-5084
Kreg Pocket Hole Jigs, Lid Supports, Piano Hinges, Shelf-Support Pins

Kreg Tool Company
515-597-2234
kregtool.com
Kreg Pocket Hole Jigs

Lee Valley
800-871-8158
leevalley.com
Bronzed Knobs, Piano Hinges, Shelf Hangers, Stem Bumper Glides

MLCS
800-533-9298
mlcswoodworking.com
Router Bits

WOOD-KOTE
800-843-7666
woodkote.com
Jel'd Stain

Woodworker's Supply
800-645-9292
woodworker.com
Knobs, Kreg Pocket Hole Jigs, Lid Supports, Piano Hinges

UGL
507-344-1202
www.ugl.com
Zar Stains

WOODSMITH PROJECT SUPPLIES

To order back issues or a hardware kit from *Woodsmith Project Supplies*, please use our toll-free order line, see below. It's open Monday through Friday, from 8 AM to 5 PM Central Time. Before calling, please have your VISA, MasterCard, Discover, or American Express card ready.

If you would prefer to mail in an order, please call the toll-free phone number below for more information concerning shipping charges as well as any applicable sales tax.

1-800-444-7527

Woodsmith *on the web*

- "Online Extras" - Plans, Patterns, & More
- Over 100 Woodworking Tips Online
- Visit Our Readers' Project Photo Gallery
- Project Plans You Can Download
- Catalog of Project Kits, Tools, Jigs, & Plans
- Forums for Woodworking, Tools, & Classifieds
- Links to Other Woodworking Sites
- Order *Woodsmith* & *ShopNotes* Back Issues

www.woodsmith.com

Online Customer Service

Click on Subscriber Services at **www.woodsmith.com**

- Access your account status
- Change your mailing or email address
- Pay your bill
- Renew your subscription
- Tell us if you've missed an issue
- Find out if your payment has been received

Final Details

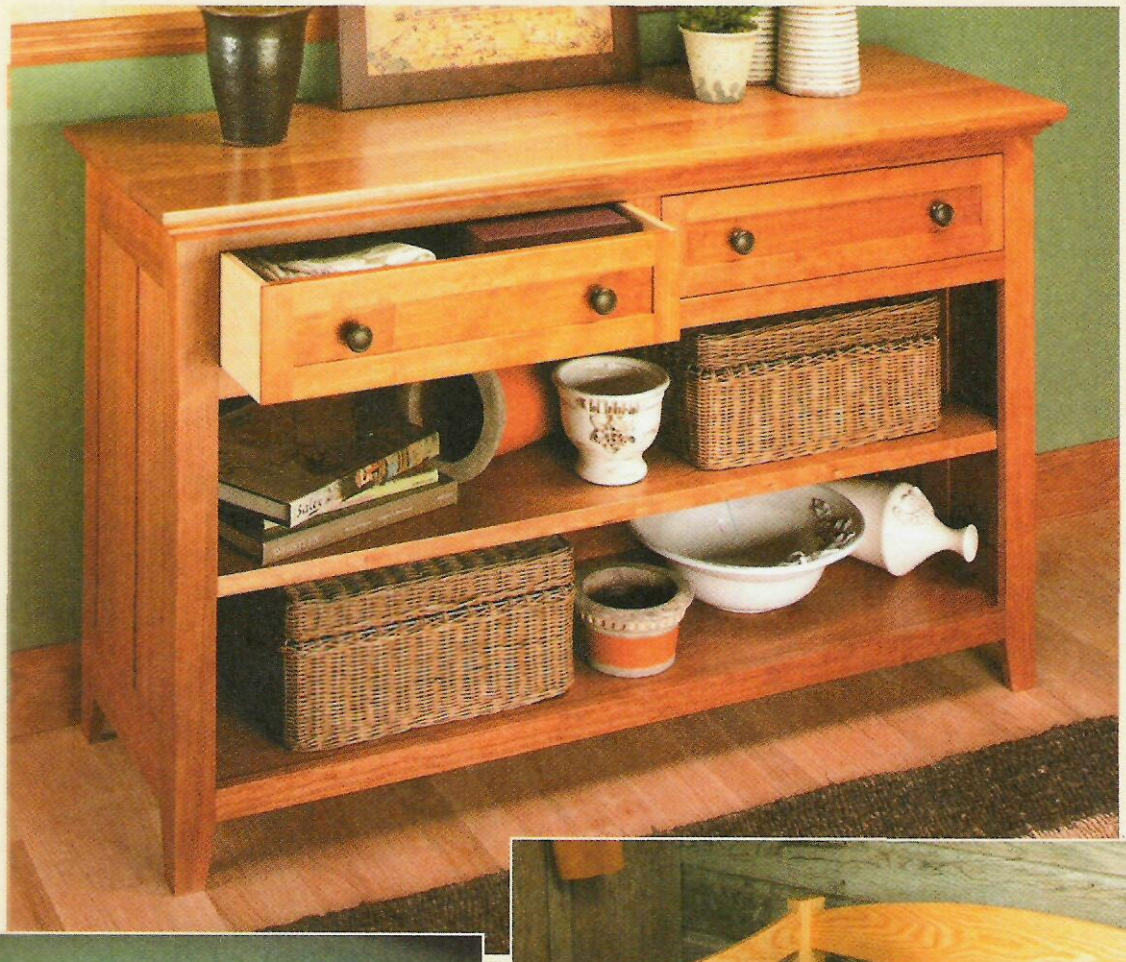

◄ **Cherry Console.** *Whether it's the frame and panel assemblies or the applied frames on the drawers, you'll enjoy a variety of woodworking techniques. Detailed plans begin on page 6.*

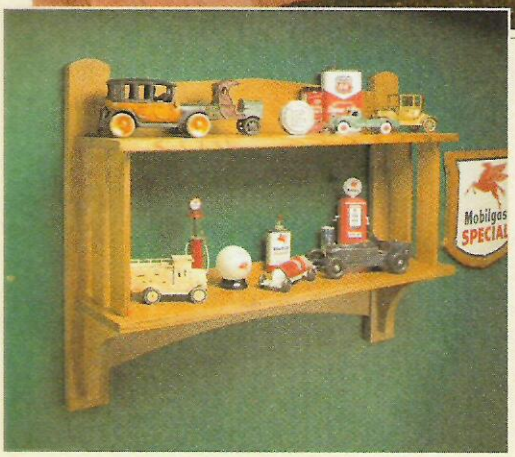

▲ **Craftsman Wall Shelf.** *This American classic features some basic mortise and tenon joinery and a few simple curves, so you can build it in almost no time. See page 18 for complete plans.*

▲ **Beaded-Panel Storage Bench.** *The beaded panels on this bench really grab your attention. And all you need to make them is an inexpensive router bit. And that's not the only thing unique about this bench. The frame is built with mortises and tenons that are a little out of the ordinary — but not hard to make. Step-by-step instructions begin on page 28.*

ONLINE EXTRAS

Woodsmith

CHERRY CONSOLE

MATERIALS & SUPPLIES

A End Panels (8)	¼ ply.	5 9/16 x 21 11/16
B Front End Stiles (2)	¾	x 2⅛ - 31
C Back End Stiles (2)	¾	x 2½ - 31
D Center End Stiles (2)	¾	x 2½ - 21¾
E Upper End Rails (2)	¾	x 3¾ - 12¾
F Lower End Rails (2)	¾	x 3½ - 12¾
G Back Panels (8)	¼ ply.	- 10 3/16 x 21 11/16
H Back Stiles (2)	¾	x 2 - 31
I Back Center Stiles (3)	¾	x 2½ - 21¾
J Upper Back Rail (1)	¾	x 3¾ - 45½
K Lower Back Rail (1)	¾	x 3½ - 45½
L Front Stiles (2)	¾	x 2 - 31
M Front Rails (3)	¾	x 1½ - 48
N Front Center Stile (1)	¾	x 2 - 8⅜
O Bottom (1)	¾	x 15 7/16 - 48½
P Bottom Cleat (1)	½	x ½ - 6
Q Frame Cleats (4)	¾	x 1½ - 15¼
R Frame Stretchers (4)	¾	x 1½ - 48
S Outer Dwr. Sprts. (4)	¾	x 1⅛ - 15¼
T Inner Dwr. Sprts. (2)	¾	x 3½ - 15¼
U Dwr. Fronts/Backs (4)	½	x 5¼ - 21⅛
V Dwr. Sides (4)	½	x 5¼ - 15
W Dwr. Bottoms (2)	¼ ply.	- 14½ x 21⅛
X Dwr. Trim	3/16	x 1½ - 100 rgh.
Y Dwr. Guides (4)	¼	x ¾ - 14
Z Dwr. Runners (2)	1	x 1½ - 15¼
AA Dwr. Stops (4)	½	x 11/16 - 8 rgh.
BB Adjustable Shelf (1)	1	x 15⅛ - 47⅞
CC Top (1)	1	x 18 - 52
DD Cove Molding	¾	x ¾ - 90 rgh.

- (24) #8 x 1¼" Fh Woodscrews
- (8) #8 x 1½" Fh Woodscrews
- (3) #8 x 2" Fh Woodscrews
- (8) Plastic Stem Bumpers
- (4) #8 x 1½" Rh Woodscrews
- (4) #8 Washers
- (4) ¼" Spoon-style Shelf Supports
- (4) 1¼" x 1" "Ring" Knobs (Bronze)

CUTTING DIAGRAM

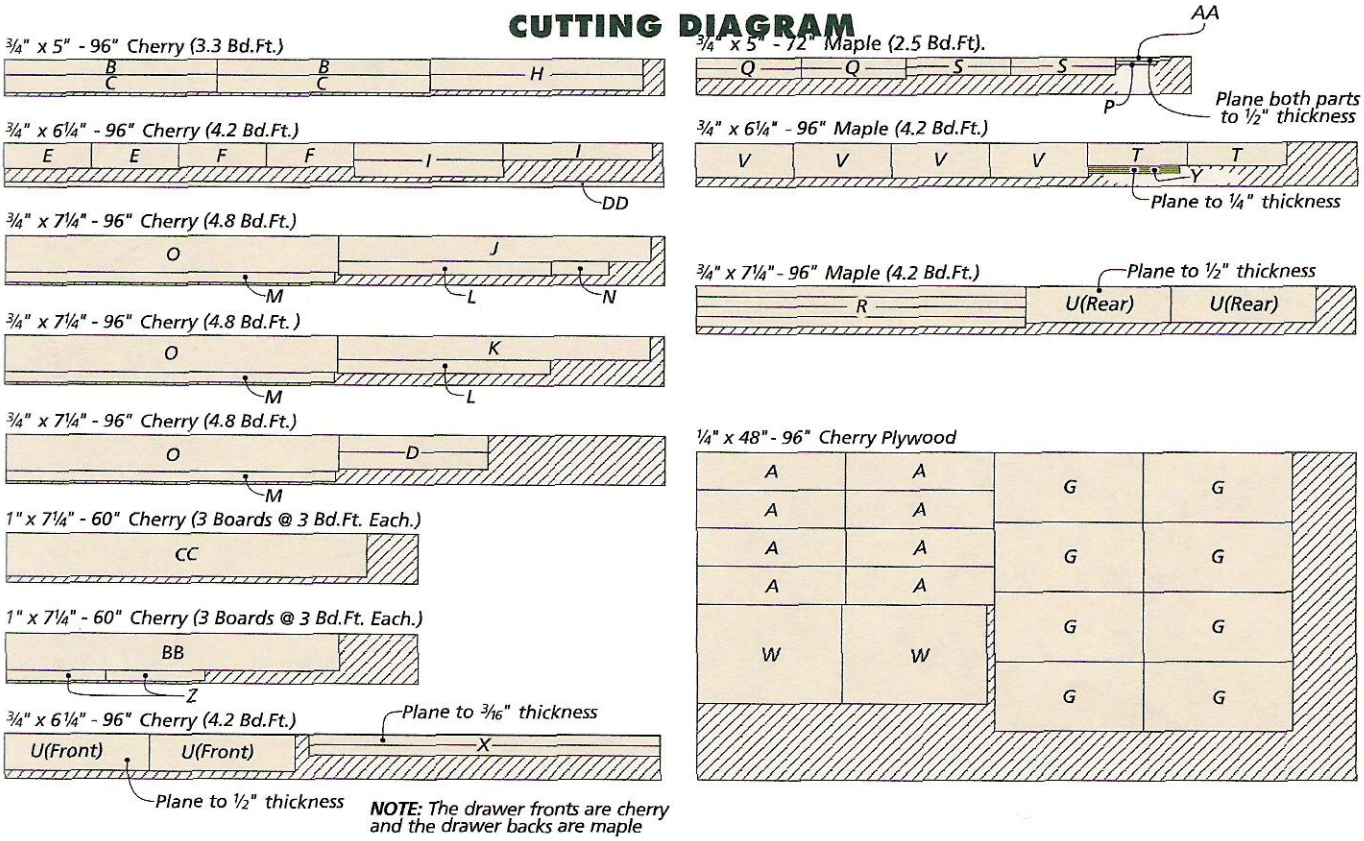

NOTE: *The drawer fronts are cherry and the drawer backs are maple*

©2003 August Home Publishing. All rights reserved.

ONLINE EXTRAS

Woodsmith

CRAFTSMAN WALL SHELF

MATERIALS

A	Stiles (2)	1 x 3½ - 28 1/16
B	Upper Rail (1)	¾ x 6½ - 31
C	Lower Rail (1)	¾ x 7¼ - 31
D	Shelves (2)	¾ x 8 - 36
E	Uprights (4)	½ x 2¼ - 12½
F	Brackets (2)	1 x 6 - 7¾

SUPPLIES

- (14) #8 x 1¾" Fh Screws
- (2 pr.) Mounting Clips
- (8) #6 x ⅝" Fh Woodscrews
- (8) #8 x 2" Fh Woodscrews

CUTTING DIAGRAM

1" x 7½" - 48" (2.5 Bd. Ft.)

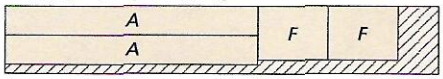

¾" x 7½" - 68" (Two boards @ 2.5 Bd. Ft. Each)

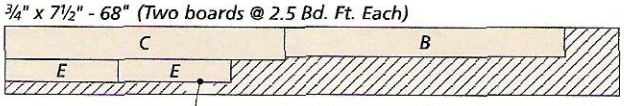

***NOTE:** The "E" pieces will need to be cut to ½"thick*

¾" x 5" - 74" (Two boards @ 2.6 Bd. Ft. Each)

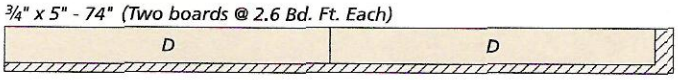

©2003 August Home Publishing. All rights reserved.

ONLINE EXTRAS

Woodsmith

STORAGE BENCH

MATERIALS & SUPPLIES

A	Front Legs (2)	1½ x 2½ - 23¾
B	Back Legs (2)	1½ x 2½ - 26¼
C	End Rails (4)	¾ x 2½ - 17
D	Curved End Rails (2)	¾ x 5 - 17
E	Upper Stretchers (2)	¾ x 1¾ - 50
F	Lower Stretchers (2)	¾ x 2½ - 50
G	Back Support (1)	¾ x 6 - 50
H	Bottom Cleats	¾ x ¾ - 130 In. in.
I	Bottom (1)	¾ ply. - 17 x 48
J	Beaded Boards (46)	½ x 3¼ - 9
K	Upper Stops	½ x 1¾ - 130 In. in.
L	Lower Stops	½ x 1 - 130 In. in.
M	Seat Support (1)	¾ x 4 - 48
N	Seat (1)	¾ x 15 1/16 - 47⅞
O	Seat Cleats (2)	¾ x 1½ - 12

- (1) 48" Brass Piano Hinge w/Screws
- (2) Lid Stays (Left & Right) w/Screws
- (46) #8 x 1" Fh Woodscrews
- (6) #8 x 2" Fh Woodscrews

CUTTING DIAGRAM

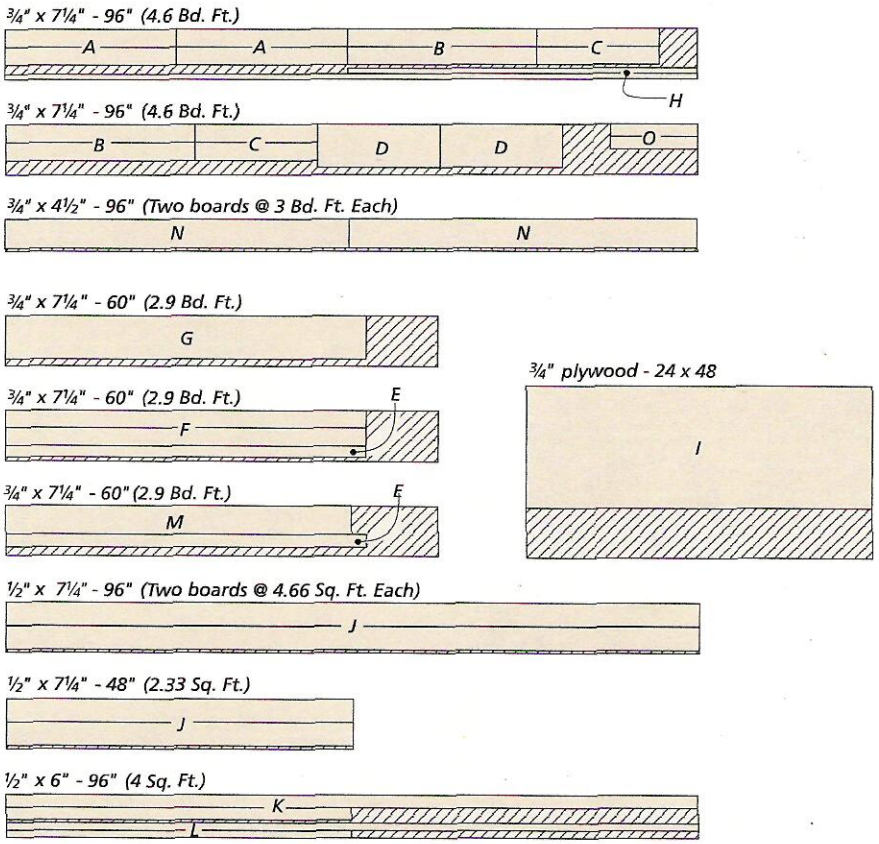

 ©2003 August Home Publishing. All rights reserved.

JOINERY ..... Stub Tenon & Groove

The stub tenon and groove joint is quick and easy to cut. And the entire joint can be made on the table saw.

It's made by first cutting a groove on one edge of each stile (the vertical pieces) and rail (the horizontal pieces). These grooves hold a center panel and short, "stub" tenons cut on the ends of just the rails.

The depth of the groove (and the length of the tenon) can vary depending on the type of panel you plan on using. A 1/4"-deep groove works fine with a plywood panel. But if the panel is solid wood, you should use a 3/8"-deep groove. Why the difference?

It has to do with how the frame is assembled. I glue a plywood panel into the groove so it becomes a part of the joint. That way I can get away with a shorter tenon. But a solid panel can't be glued. It has to "float" to allow for wood movement. So deeper grooves (and longer tenons) increase the gluing area.

But there's more to consider than just the depth of the grooves. The grooves and tenons should also be centered on the thickness of the workpieces. And the workpieces should all be the same thickness. This way, there will only be two setups: one for the grooves, and another for the tenons.

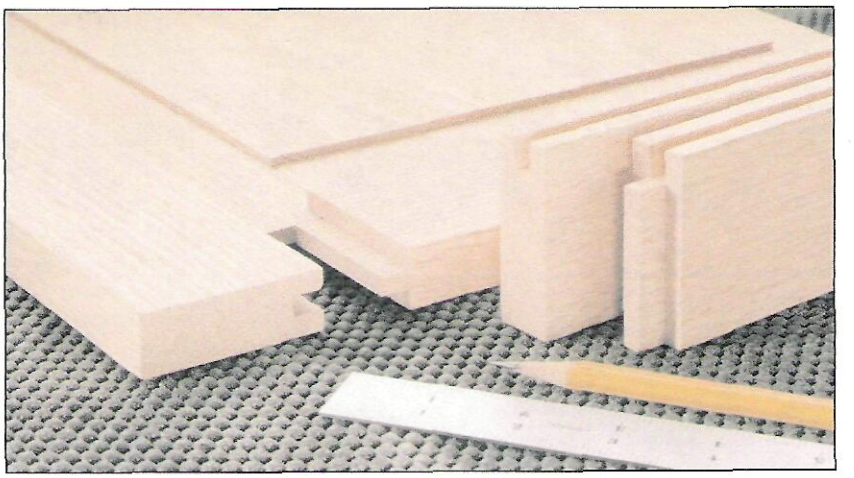

GROOVES

The first step is to cut the grooves centered on the frame pieces.

When cutting a groove for a solid panel, I usually make its width 1/3 the thickness of the stock. For example: a 1/4"-wide groove in 3/4"-thick stock. But for a plywood panel, I cut the groove to match the thickness of the plywood.

Cutting the groove so it's centered on the edge of a frame piece is easy. Simply adjust the rip fence on your table saw so the blade cuts close to the center *(Fig. 1)*. You don't need it to be perfect — here's why.

After making your first pass, just flip the board end-for-end and make a second cut *(Fig. 2)*. Now even if your blade isn't centered, the groove will be.

To adjust the width of the groove, nudge the rip fence and make another cut. Remember, you're cutting stock from both sides of the workpiece. So make small adjustments and sneak up on the final width of the groove.

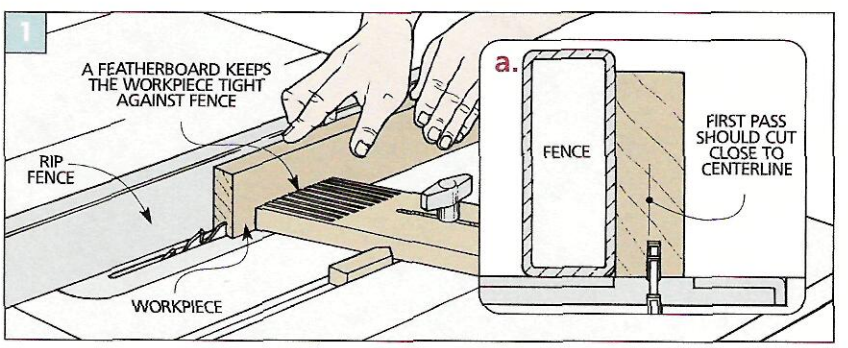

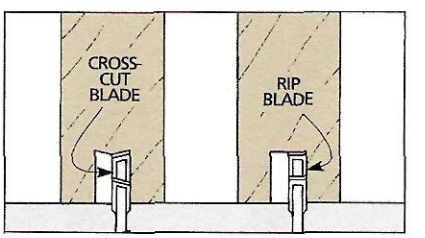

Blade Choices. *A rip blade is a good choice for cutting the grooves in the rails and stiles. The flat-topped teeth produce a flat-bottomed groove.*

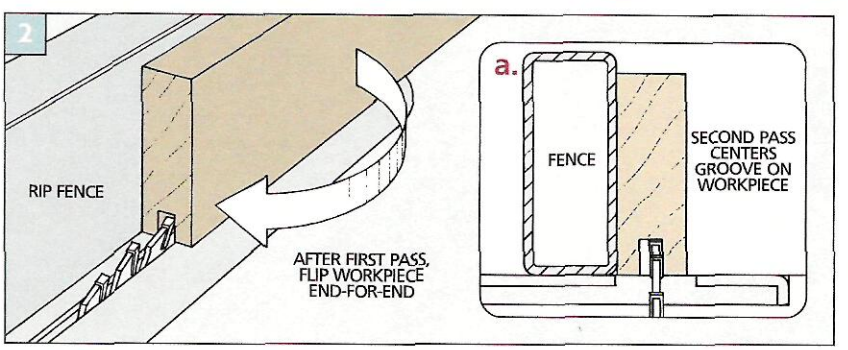

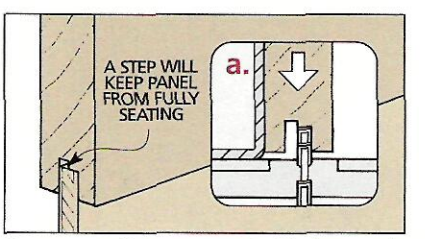

Downward Pressure. *Hold the workpiece firmly against the table as you make the cut to prevent a "stepped" bottom in the groove.*

© 2002 August Home Publishing Company

STUB TENONS

Once the grooves are complete, the second step is to cut tenons on the ends of the rails. A single blade will work. But it takes several passes to remove the waste. And it leaves small ridges that make fitting the tenon difficult.

That's why I like using a dado blade. It cuts each side of the tenon cleanly and it does it in a single pass.

To use a dado blade, first bury it in an auxiliary fence *(Fig. 3)*. Then adjust the fence to set the length of the tenon.

Now set the height of the blade to establish the thickness of the tenon. A quick way to get close is to set the blade flush with the bottom edge of the groove on a stile *(Fig. 4)*.

To center the tenon on the workpiece, equal amounts are cut from each side of the rail *(Figs. 5 and 5a)*. Make your cuts on a test piece first, then check for a snug fit in the groove.

If needed, adjust the height of the blade a little and make another practice cut. When the tenon fits tight in the groove, you're ready to cut all the tenons on the rail pieces.

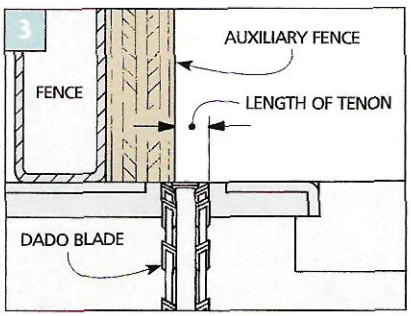

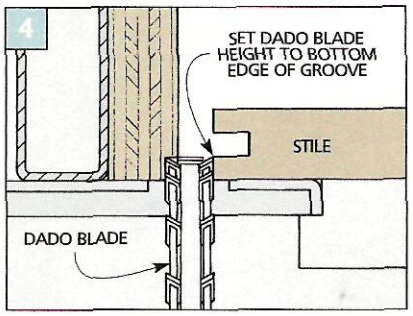

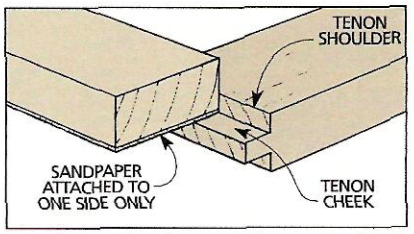

Sand the Cheek. *Sand the tenon cheek to get a snug fit in the groove. Stay clear of the shoulder to keep it sharp.*

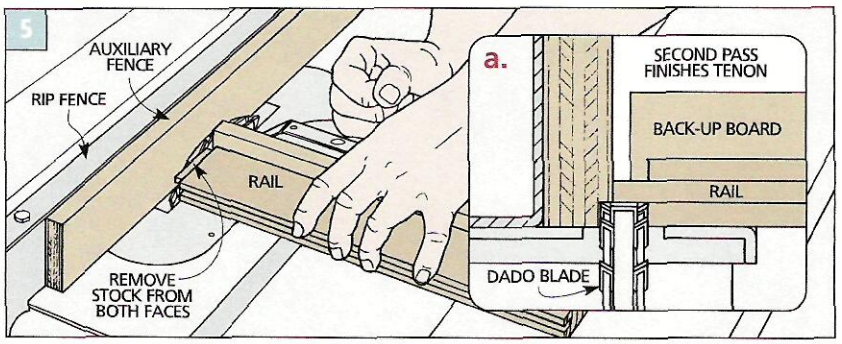

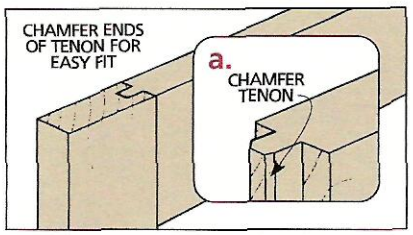

Chamfer Tenon. *Small chamfers on the ends make it easier to fit a tenon into a groove during assembly. It also provides some space for excess glue.*

ASSEMBLY

It's a good idea to dry-assemble the stiles, rails, and center panel to make sure everything fits together tight.

Now is also a good time to sand the face of the center panel and the inside edges of the stiles and rails. These areas can be difficult to sand once the frame has been assembled.

To assemble a frame with a solid panel, apply a thin bead of glue on each tenon cheek only *(Fig. 6)*. Then clamp the pieces together *(Fig. 7)*. A spacer under the door will keep clamping pressure centered on the frame.

One brad driven in the top rail will keep a solid panel centered. Plywood panels can be glued in place *(Fig. 8)*.

Finally, check that the frame is flat and square. If the assembly isn't flat, try loosening the clamps a little. If it isn't square, try repositioning the clamps.

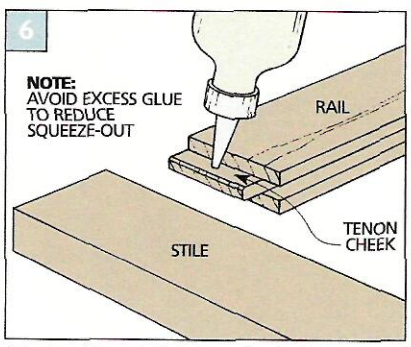

Gluing Up. *A thin bead of glue spread evenly on each cheek of the tenon is all that's needed when gluing up the joint.*

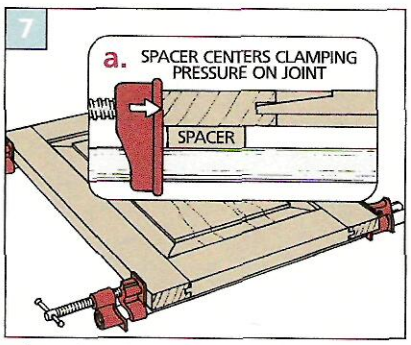

Clamping Pressure. *Putting a spacer under the workpiece aligns the joint with the clamp jaw for even pressure.*

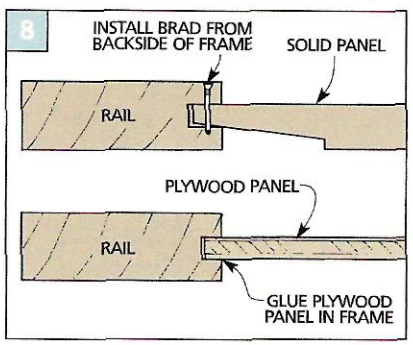

Securing Panel. *A solid panel floats in the frame. Use a brad to keep it centered. A plywood panel can be glued in.*

© 2002 August Home Publishing Company